

UV90



UVV1A

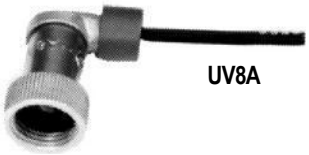

UV8A



45UV3

SC-102
October 15, 2026

FIREYE FLAME SCANNERS

UV non-self-checking Scanner Models: UV1A3, UV1A6, UV8A, UV2, UV2A6, UV1A-1-CEX, 45UV3, UV90-3, UV90-6, UV90-9

For UV self-check Scanners refer to SC-101

For Infrared Photocell Scanners refer to SC-103

c UL us LISTED

FM APPROVED

DESCRIPTION

The UV1A3/6, UV1A-1-CEX, UV2/UV2A6, 45UV3, UV90-3/6/9 Scanners are used with the M-Series, M-Series II, MicroM, FlameWorx, MB-2 and D-Series controls as well as the Fireye FLAME-MONITOR™, BurnerLogix and Nexus System. The UV1A3/6 scanners come with 3 ft. and 6 ft. cables rated for Tray Cable - Exposed Run (TC-ER) and comply with the crush and impact requirements of the standard for metal clad cable, UL 1569. The UV1A-1-CEX is an ATEX rated version of the UV1A. The UV2 (36 inch) and UV2A6 (72 inch) are fitted with a 3/8" NPT female to 1/2" NPT male adapter fitted into the 1/2" threaded coupling of the UV1A3/6 respectively. The UV90-3/6/9 is available with 3 ft., 6 ft. and 9 ft. shielded flexible cables.

The UV8A Scanner is a 90° right angle ultraviolet flame scanner used in conjunction with the M-Series, M-Series II, MicroM, FlameWorx, MB-2 and D-series controls as well as the Fireye® FLAME-MONITOR™, BurnerLogix and the Nexus System. It is available only with 72 inch (1830mm) unshielded lead wires.

The 45UV3 Scanner has a rugged cast housing that mounts on a 3/4-inch pipe with sleeve and set-screw. The replaceable UV tube is mounted in a vertical position for greater sensitivity. Non-self-checking.

The UV90 Series Scanners are designed for front and lateral (90°) mounting which, in some applications, allow the scanners to obtain a clearer view of the flame. The UV90, with its exclusive snug-fit mounting block, eliminates the need for a threaded sight pipe.

The UV tube is made of quartz and is filled with a gas that ionizes when struck by UV radiation from the flame. In the absence of UV radiation, the gas acts as an insulator between two electrodes which are mounted inside the tube. These electrodes are energized continuously by a high voltage. During combustion, UV radiation ionizes the gas, causing current pulses to flow between the electrodes. These current pulses result in a flame signal which is transmitted to the amplifier in the control, where it is processed to energize or hold in the flame relay.



WARNING: When installing or replacing UV scanners, a minimum pilot turndown test on pilot ignited burners and a spark pickup test on all burners must be performed. Refer to bulletins E-1101, C-4000, MC-5000 or BurnerLogix for recommended procedures.

All installations, service and troubleshooting of Fireye products must be performed by qualified technicians!

© 2026 Fireye

APPLICATION

UV scanners are recommended for detecting flames from standard fuel gases, some waste gases and light oil fuels such as No. 2 oil. Flames from heavier oils can be detected with UV scanners but the unburned fuel shroud and/or atomization shroud can block passage of the UV from the flame zone to the UV tube, causing nuisance burner/boiler trips. Infrared detection is recommended for fuel oil heavier than No. 2, and some installations where waste gases are burned together with natural gas as a main flame.

NOTE: Certain safety codes and regulations require the use of self-checking ultraviolet scanners. For information on self-checking UV scanners, refer to Bulletin SC-101.

SPECIFICATIONS

Operating Voltage: (S1-S2): 560 VAC @120V (230V) 50/60 Hz applied

Operating Temperature Limits: Maximum: 200° F (94° C)
Minimum: -40° F (-40° C)

Humidity: 85% RH maximum non-condensing

UV1A3: $^1/_2$" NPT, 36" (915mm) shielded leads
UV1A6: $^1/_2$" NPT, 72" (1830mm) shielded leads
UV8A: $^1/_2$" NPT, 72" (1830mm) unshielded leads,

UV1A-1-CEX: 1 NPT, $^1/_2$" NPT conduit cable entry
UV2: $^3/_8$" NPT, 36" (915mm) shielded leads
UV2A6: $^3/_8$" NPT, 72" (1830mm) shielded leads
45UV2-1020 1" NPT mount 60 Hz, 72" (1830mm) unshielded leads - **OBSOLETE**
45UV3-1050 $^3/_4$" Sleeve/setscrew mount, 72" (1830mm) unshielded leads

UV90-3 36" (915mm) shielded leads
UV90-6 72" (1830mm) shielded leads
UV90-9 108 " (3660mm) shielded leads

For scanner dimensions refer to Figures 2 and 4.
Consult factory for custom lead lengths.

IMPORTANT NOTE

The information provided in this bulletin is directed to assist boiler and combustion service technicians who are experienced in the installation and operation of Fireye Flame Safety equipment. Persons not familiar with Fireye products should contact the nearest Fireye representative or other qualified service group.

The UV1A, UV2, UV8A, UV1A-1-CEX, 45UV3 and UV90 as well as all other Fireye scanners, are designed to be used exclusively with the appropriate Fireye Flame safeguard and Burner Management controls. The application of these scanners to other than Fireye equipment should be reviewed for approval by Fireye.

APPLICATION REFERENCE

UV1A, UV2, UV8A, 45UV3 and UV90 can be used only with the following FIREYE flame safeguard controls.

FIREYE FLAME-MONITOR	MB-2 SERIES	MicroM & M-SERIES II	D SERIES	PFM ADAPTOR KITS	FLAMEWORX	NEXUS	BURNERLOGIX
To be used with EUV1 Amplifier Card	Use with 61-3359 UV Amplifier	MAUV1 MAUV1T MEUV1 MEUV4	All D-Series using 72DUV1 Amplifier	PFM2UV PFM3UV	MBUV-300D MBUV-310D	NX3000 NX3100 NX4000 NX4100	YB110UV YB230UV

© 2026 Fireye

CAUTION: The UV1A, UV2, UV8A, 45UV3 and UV90 ultra-violet flame scanners and associated amplifier modules are non-self-checking UV systems and should be applied only to burners that cycle often (e.g.: a minimum of once per 12 hours) in order for the safety checking circuit to be exercised. If component checking is required during burner operation for constantly fired burners, utilize the self-checking ultra-violet flame scanners (45UV5) with associated amplifier module (EUVS4), (MEUVS, (MBUVS) or YB110UVSC or the infrared flame scanner (48PT2) with associated Auto Check amplifier (E1R1, E1R2, E1R3, MEIR1, MEIR4, YB110IR).

FIGURE 1. TYPICAL SCANNER MOUNTING

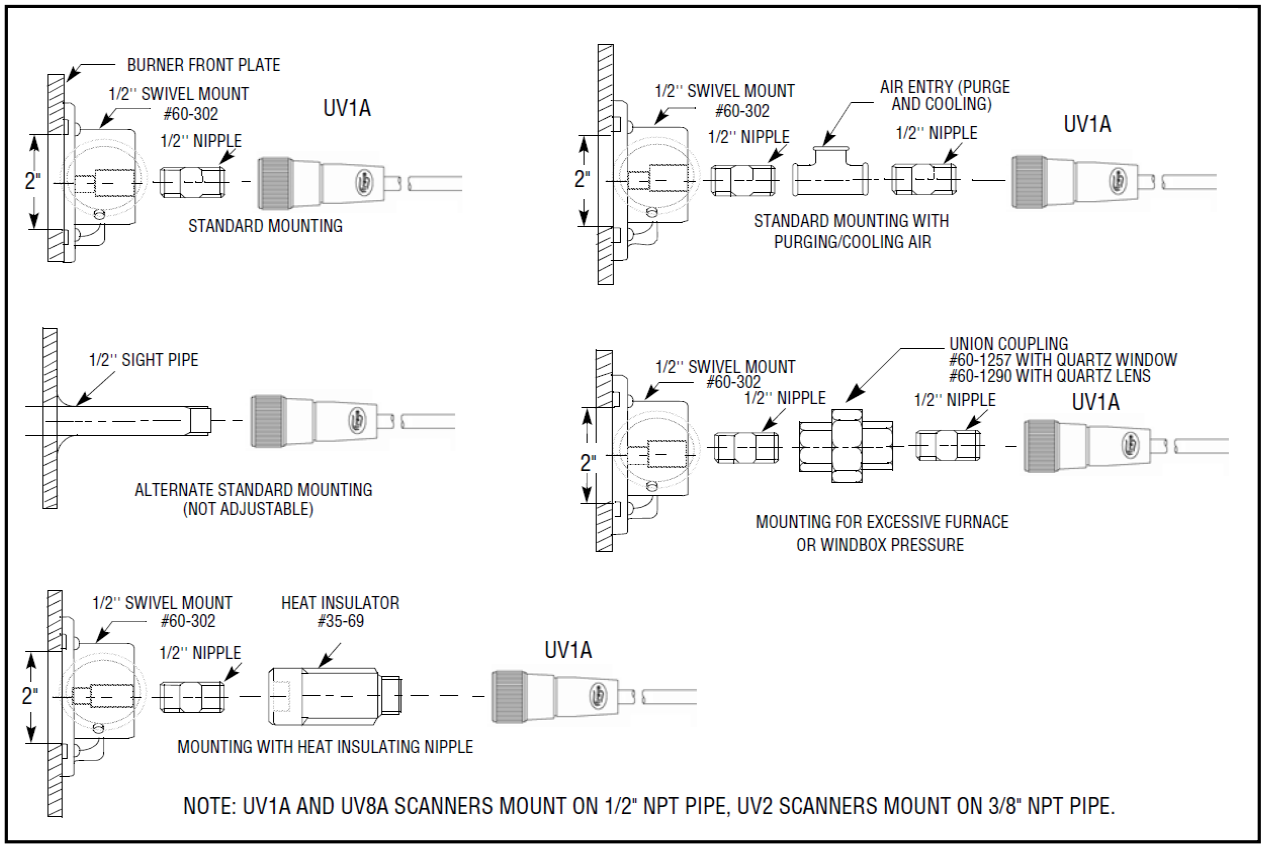

FIGURE 2. SCANNER MOUNTING FOR UV90

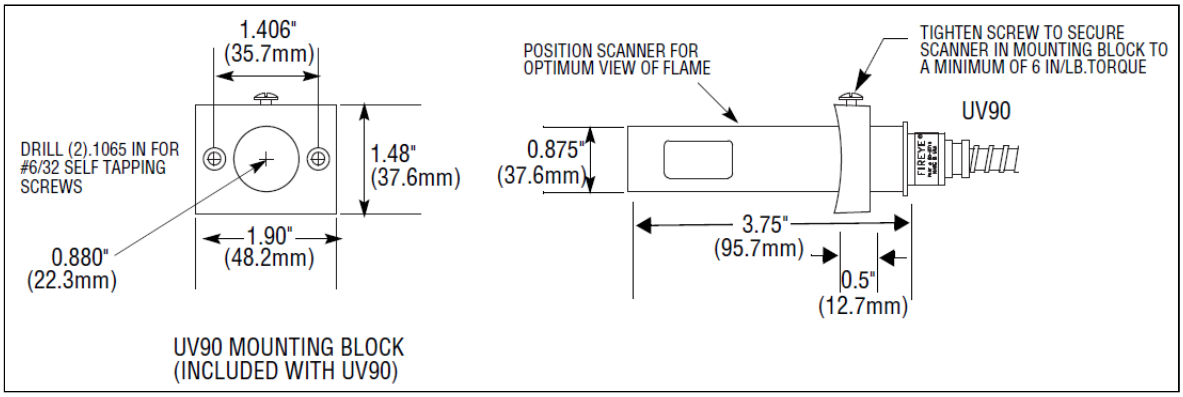

© 2026 Fireye

ACCESSORIES

PART NUMBER	DESCRIPTION
60-302	1/ 2¹¹ Swivel Union
35-69	Heat Insulator 1/2¹¹ NPT threads each end, (male x female).
60-1257	1/2¹¹ NPT Union with quartz window
60-1290	1/2¹¹ NPT Union with quartz lens to increase sensitivity
4-314-1	Replacement UV tube for 45UV3

INSTALLATION OF UV1A, UV2, UV8A, 45UV3, UV90, UV1A-1-CEX SCANNERS

WARNING: THE LEADS FROM THE UV8A SCANNER TO THE CONTROL MUST BE SHIELDED TO PREVENT ELECTRICAL NOISE FROM GENERATING A FALSE FLAME SIGNAL TO THE CONTROL.
Where possible, obtain the Burner Manufacturer's Instructions for mounting the scanner. This information is available for most standard burners. The scanner mounting should comply with the following General Instructions:

The following UL standards have been revised and now allow the use of TC-ER rated cable on Commercial boilers and burners:

- UL 295: Commercial - Industrial Gas Burners – Sections 10.1.6, 10.1.9, and 11.2.2.
- UL 296: Oil Burners – Sections 31.1.8, 31.1.11, and 32.2.2.
- UL 726: Oil fired Boiler Assemblies – Sections 15.1.6, 15.1.9, and 16.1.6.
- UL 795: Commercial - Industrial Gas Heating Equipment – Section 12.5.

1. The quartz UV tube is brittle. Care must be exercised to avoid dropping or otherwise striking the scanner with force. Keep the scanner protected until mounted.
2. Position the UV scanner within 36 inches of the flame to be monitored.
3. Select a scanner location that will remain within the ambient temperature limits of the UV Scanner (200°F). If cooling is required, use an insulating coupling (Fireye P/N 35-69).
4. The UV scanners are designed to seal off against pressures up to 1 PSI. To seal against higher pressures, install a union coupling with quartz window (P/N 60-1257). Add cooling air to reduce the scanner sight pipe temperature. (Not applicable to UV90).
5. Install the scanner on a standard 1/2 in. NPS (3/8 in. for UV2/UV2A6, 3/4 in. NPT for 45UV) pipe whose position is rigidly fixed. If the scanner mounting pipe sights through the refractory, do not extend it more than halfway through. Swivel flanges are available if desired (P/N 60302). The sight pipe must permit an unobstructed view of the pilot and/or main flame, and both pilot and main flames must completely cover the scanner field of view. Oil and gas flames radiate more ultraviolet energy from the base of the flame than from further out in the flame. This fact should be considered when installing the scanner sight pipe.

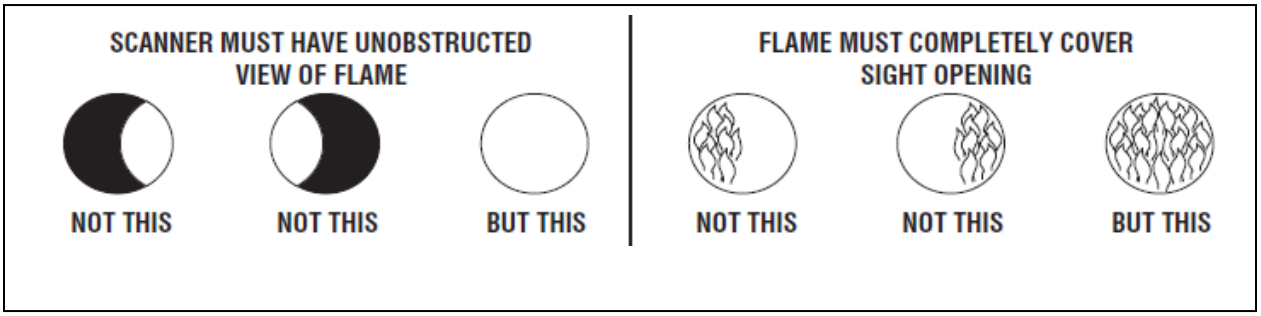

6. Since the radiated energy from an electric spark ignitor is very rich in the UV region, the field of view should be aimed so that it does not see an electric spark ignitor nor any reflector that is close to the spark.

CAUTION: The unprotected leads must be run in electrical conduit in order to eliminate pickup of electrical noise which could present an unsafe condition.

To prevent spark pickup by the UV detector, close and/or disconnect all pilot and main fuel valves. Operate the control through a burner startup cycle to determine that ignition spark cannot be detected. Burner will not ignite if spark is detected.

7. Avoid running the scanner cables or conduit in close proximity to hot surfaces at the burner.
8. Avoid running the scanner conduit in close proximity to high energy ignition wires.
9. Smoke or unburned combustion gases absorb ultraviolet radiation. On installations having negative pressure combustion chamber, a small hole drilled in the scanner sight pipe will assist in keeping the pipe clean and free of smoke. For positive pressure furnaces, provide clean air to pressurize the sight pipe, if necessary.
10. Two UV Scanners may be installed on one burner if it is necessary to view two areas to obtain reliable detection of the flame. They should be wired in parallel.
11. To increase scanner sensitivity with the UV Scanners, a quartz lens permits location of the scanner at twice the normal distance. (Union w/quartz lens P/N 60-1290).
12. Request the assistance of any Fireye Field Office for recommendations of a proper scanner installation on a non-standard application.

CAUTION: Ultra-violet tubes can simulate flame when exposed to high levels of "X" and GAMMA radiation. The table below indicates the maximum dose of radiation that a UV tube can be exposed to safely.

SOURCE	MAXIMUM DOSE	
Cobalt 60 (CO_{60})	7.5mR/Hr	
Iridium 192 (IR_{192})	1.0mR/Hr	
X-Ray	4mR/Hr	150kV @ 0.2mA
X-Ray	1mR/Hr	150kV @ 5mA

Minimum Pilot Test

This test assures that the flame detector will not detect a pilot flame too small to reliably light off the main flame. The test should be made on every new installation and following any repositioning of the flame detector. THE MINIMUM PILOT TESTS MUST BE ACCOMPLISHED BY A TRAINED AND QUALIFIED BURNER TECHNICIAN.

FIGURE 3.

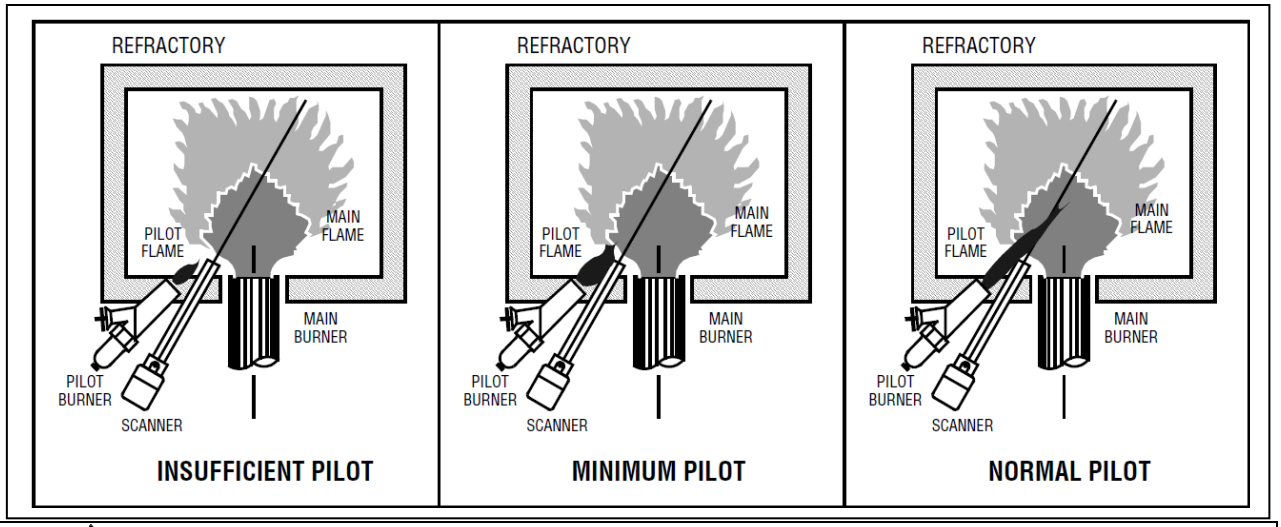

SPARK REJECTION TEST. CAUTION: The scanner must not sight the ignition spark directly or any part of the burner that can reflect the spark back to the scanner. The scanner must not see a pilot flame that is too small to reliably ignite the main flame. Test procedures vary according to the control used. See procedures as described in the technical bulletin for the control being installed.

© 2026 Fireye

WIRING - UV SCANNERS

To connect the scanner to the control, the UV1, UV2 and UV90 Scanners are supplied with up to 96" of flexible cable.

Wiring Instructions:

Wire the black and red wires (18 AWG) on the UV1A / UV2 flame scanner to terminals S1 and S2 on the Fireye flame safeguard control. **There is no polarity associated with the wire colors. Either wire (red or black) can be wired to either terminal (S1 or S2).**

Shield and Drain Wire:

The scanner provides a shield and drain wire that are internally bonded to the metal threaded $^{1}/_{2}$" NPT coupling nut. This allows a conduit clamp to provide an electrical ground around the exposed shield when entering a metal junction box or control cabinet or connect the drain wire to a suitable ground connection when using a non-metallic (or metallic) junction box or control cabinet.

Conduit required:

On those applications where conduit is required for the UV1A/UV2 scanner, Fireye recommends the Thomas and Betts 449-TB (or suitable) fitting which is used to couple 3/8" flexible metal conduit to 1/2" EMT conduit. The set screw on the fitting bites into the plastic on the UV1A / UV2 scanner and seats onto the metal casing below, providing a secure connection.

The 45UV3 is supplied with 72 in. (1830mm) lead wires. Install them in a suitable length of flexible armor cable and connect it to the control. A conduit connector is supplied with the scanner. Connect black wires (UV tube) of the 45UV3 to terminals S1 & S2 of the appropriate P-Series.

If it is necessary to extend the scanner wiring, the following instructions apply:
Scanner wires should be installed in a separate conduit. The wires from several scanners may be installed in a common conduit.



The voltage applied to UV scanners is nominally 560 VAC with no flame present.

Selection of Wire

1. Use #14, 16, or 18 wire with 75° C, 600-volt insulation for up to 100-foot distances (signal loss approximately 20% at 100 feet).
2. For extended scanner wiring up to 500 feet, or for shorter lengths to reduce signal loss, use a shielded wire (Belden 8254, RG-62/U coaxial cable, or equal) for ***each*** scanner wire. The ends of the shielding must be taped and **no**t grounded.
3. Asbestos insulated wire should be avoided.
4. Multiconductor cable is not recommended.
5. High voltage ignition wiring should **not** be installed in the same conduit with flame detector wires.



CAUTION: Keep scanner leads well clear of ignition high voltage wiring or any other high voltage or high current wiring in order to prevent false signal pickup in the scanner leads.

WARNING: Protective filtered lenses should be worn when viewing flame. Infrared and ultraviolet energy can be damaging to the eyes.

MAINTENANCE

Ultraviolet Scanners

The viewing area of the scanner must be kept clean. Even a small amount of contamination on the lens will reduce the flame signal reaching the detector by a measurable amount. Wipe the viewing area routinely using a soft cloth dampened with concentrated detergent, then wipe dry.

Flame Signal Strength

Routine observation of the flame signal strength will forewarn any deterioration in the capability of the flame detector or its application.

Periodic Safety Check

It is recommended that a procedure be established to test the complete flame safeguard system at least once a month. This test should verify the proper operation of all limit switches and safety interlocks as well as flame failure protection and fuel safety shutoff valve tightness.

Rotation

It is recommended that control and scanner units purchased as spares be installed periodically to ensure proper operation.

TROUBLESHOOTING NON-SELF-CHECKING UV SCANNERS

ZERO OR LOW FLAME SIGNAL

1. Zero volts at test jacks on control.
   — Make sure scanner has good view of the first $^{1}/_{3}$ of flame. Reposition scanner for best flame signal. If no signal...
2. Check for approximately 560 VAC across S1-S2 on control, with no flame present, as follows: — Use meter with 20k ohms/volt sensitivity.
   — De-energize control.
   — Close and secure all fuel valves.
   — Energize control and measure voltage across S1-S2.
3. If voltage across S1-S2 is acceptable...
   — With control energized, remove scanner from burner and bring it to within a few inches of a UV source such as a gas lighter or propane torch.
   — Check for flame signal at control.
4. If no flame signal...
   — Make sure scanner lens is clean and dry.
   — De-energize control and check continuity of leads between scanner and control.
   — Replace scanner
   — Replace amplifier or control.
5. If voltage across S1-S2 is low, check L1-L2 for proper line voltage. If line voltage is good: De-energized control, remove scanner lead wires from terminals S1 and S2.
   — Energize control and recheck for proper voltage across S1 and S2.
   — If voltage across S1 and S2 is good, replace scanner or lead wires.
   — If voltage across S1 and S2 is low, replace amplifier or control.

FALSE FLAME SIGNAL

1. Control will not start burner.
   — Check control wiring, all limits and interlocks.
   — Verify flame signal at test jacks upon energizing control.
2. Flame signal appears at test jacks when no flame is in combustion chamber. — De-energize control to remove scanner leads from S1-S2.
   — Close and secure all fuel valves.
   — Energize control.
   — Check for induced voltage pickup to amplifier.
3. Burner starts up with scanner removed from S1-S2.
   — Deenergize control and connect scanner to S1-S2.
   — Energize control.
   — Check scanner for runaway condition. Look for a blue glow in the UV tube.
   — If glow is present, replace scanner.
   — If no glow is present, check to see that scanner leads are well clear of ignition or other noise carrying lines.
4. Burner does not start up even with scanner removed from S1-S2.
   — Check control wiring, all limits and interlocks.
   — Replace control/amplifier.

© 2026 Fireye

FIGURE 4. UV SCANNER OUTLINE DIMENSIONS

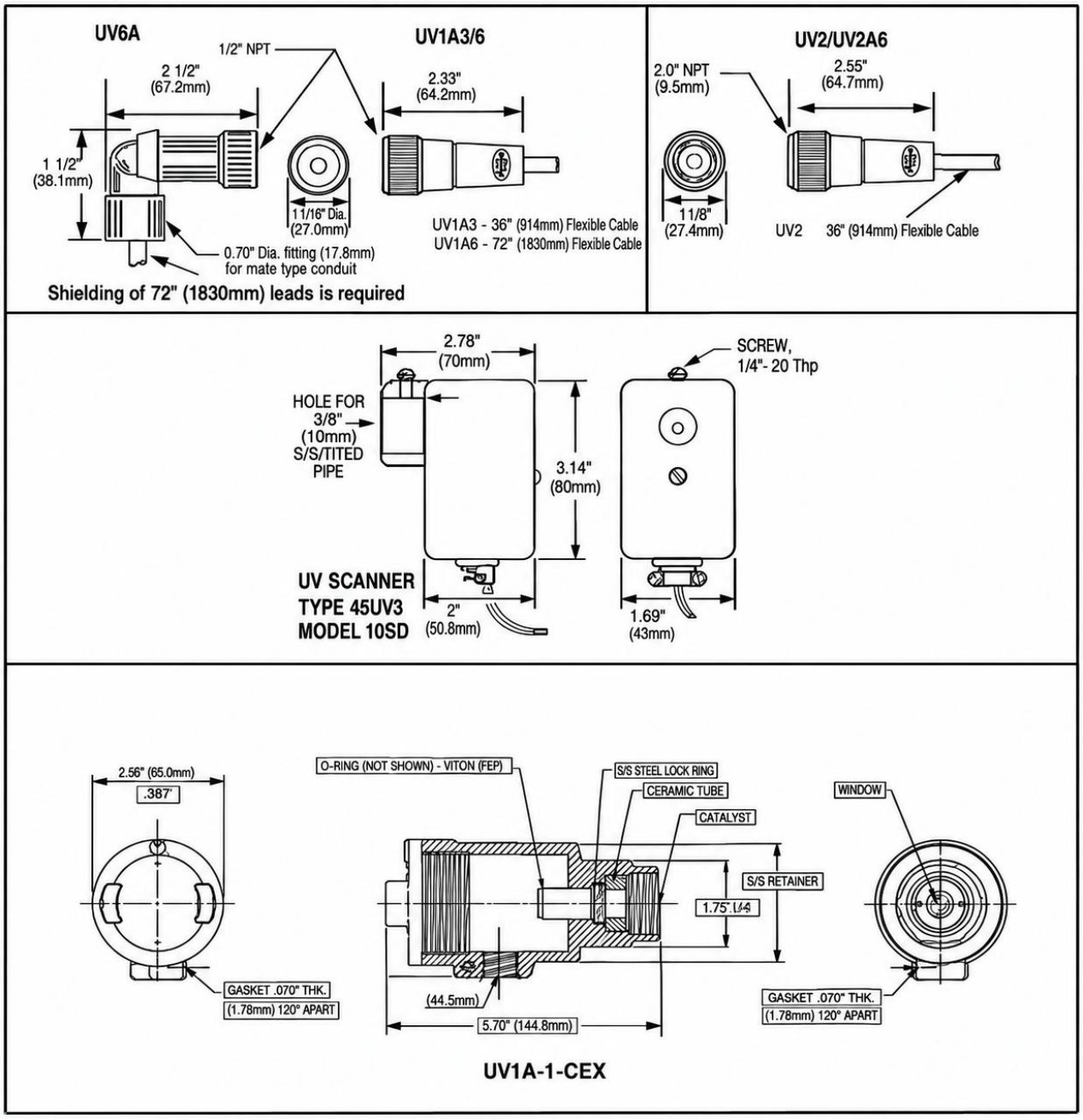

⚠	WARNING: The leads from the UV1A, UV8A, UV90 and UV1A-1-CEX Scanners to the control must be shielded to prevent electrical noise from generating a false flame signal to the control.

NOTICE

When Fireye products are combined with equipment manufactured by others and/or integrated into systems designed or manufactured by others, the Fireye warranty, as stated in its General Terms & Conditions of Sale, pertains only to the Fireye products and not to any other equipment or to the combined system or its overall performance.

WARRANTIES, EXCLUSIVE REMEDIES, AND LIMITATION OF DAMAGES

Fireye guarantees for one year from the date of installation or 18 months from the date of manufacture, whichever occurs first, to replace, or at its option, to repair any product or part thereof which Fireye, in its sole discretion, deems to be defective in material or workmanship or which otherwise fails to conform to the description of the product on the face of its sales order. Fireye's obligations pursuant to this warranty do not extend to any products or parts thereof which Fireye determines to have been installed, operated, maintained, repaired, or altered improperly or otherwise than in conformity to Fireye's applicable instructions, or which have been subject to misuse, accident or neglect.

THE FOREGOING IS IN LIEU OF ALL OTHER WARRANTIES, BOTH EXPRESS AND IMPLIED, INCLUDING THE WARRANTIES OF MERCHANTABILITY AND FITNESS FOR A PARTICULAR PURPOSE. EXCEPT AS SPECIFICALLY STATED IN THESE TERMS AND CONDITIONS OF SALE, REMEDIES WITH RESPECT TO ANY PRODUCT OR PART MANUFACTURED OR SOLD BY FIREYE, OR WITH RESPECT TO ANY BREACH OF OR DEFAULT UNDER THIS CONTRACT (INCLUDING ANY BREACH OF WARRANTY), SHALL BE LIMITED EXCLUSIVELY TO THE RIGHT TO REPLACEMENT OR REPAIR F.O.B. FIREYE MAIN WAREHOUSE LOCATION, AS ABOVE PROVIDED. IN NO EVENT SHALL FIREYE BE LIABLE FOR CONSEQUENTIAL OR SPECIAL DAMAGES OF ANY NATURE WHICH MAY ARISE IN CONNECTION WITH SUCH PRODUCT OR PART OR ANY BREACH OF OR DEFAULT UNDER THIS CONTRACT. TO THE EXTENT PERMITTED BY LAW, THE AGGREGATE LIABILITY OF FIREYE HEREUNDER WHETHER IN CONTRACT, TORT (INCLUDING NEGLIGENCE) OR OTHERWISE, WILL BE LIMITED TO ONE TIMES THE CONTRACT VALUE, PROVIDED HOWEVER THE FOREGOING LIMITATION DOES NOT LIMIT THE LIABILITY OF FIREYE FOR ANY INJURY TO, OR DEATH OF A PERSON, CAUSED BY THE GROSS NEGLIGENCE OF FIREYE

© 2026 Fireye