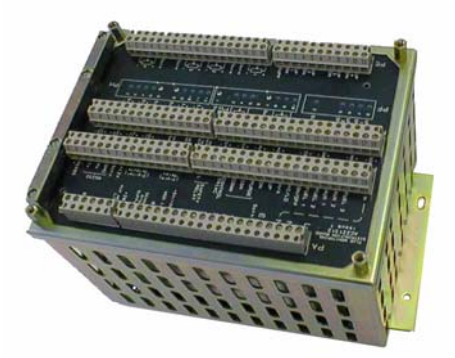

PPC5000 Fuel / Air Ratio Controller

DESCRIPTION

The PPC 5000 is an electronic fuel/air ratio controller employing techniques of parallel positioning for industrial burners firing gaseous and/or liquid fuels.

The basic unit controls four servo motors, positioning them to within 0.1 of an angular degree. Seven programmable profiles are available where each profile determines the positional relationship between all servo motors across the firing range of the burner. The unit has the capability to increase the number of motor drives from four to eight. These servo motors can operate fuel butterfly or metering valves and air dampers.

Variable speed interfaces are available to control, the burner fan motor speed and water feed pumps. Controlling the fuel/air ratio by adjustment of fan speed saves electrical energy and reduces noise. When the motor speed is halved an 80% electrical energy saving can be realized. Up to four variable speed interfaces can be added to a single PPC 5000.

Oxygen trim control is another valuable option to achieve maximum efficiency and fuel savings. Fireye's zirconia oxygen probe has earned an international reputation for reliability and longevity. Oxygen trim automatically and continuously compensates for all the variables that affect efficient combustion. This option will give typical fuel savings of 2% and will ensure safe and efficient combustion when firing fuels with varying calorific value.

Optional simultaneous firing software has been developed by Fireye which employs novel, dynamic setpoint technology. It ensures that the correct fuel/air ratio is maintained across the firing range when two fuels are being fired simultaneously and the ratio of one fuel to the other is maintained correctly. A single 4 to 20mA signal varies the mix of the two fuels being fired. Oxygen trim is needed for all simultaneous firing applications. Fuels or fuel combinations with differing and/or varying calorific values can be accommodated. Switching between various fuel combinations becomes a routine task.

"ComFire" communications software is an option available for the PPC 5000 electronic fuel/air ratio controller. This powerful package gives connection to a local or remote personal computer via an RS485 connection. Information such as setpoints, profiles and engineer's data is displayed in tabular and graphic form. A dynamic plant mimic shows the status of all burners on the site provided that they have PPC 5000 controls. Burner utilization curves can be displayed as chart recorder images and alarms with time and date stamp are also shown. "ComFire" provides non-safety critical analogue and digital control of the burner from the PC. It is possible to select "burner on", "trim on", "release to ignite", "release to modulate", "enable boiler sequencing", lead boiler for sequencing control and boiler setpoint. Modulation rate, boiler control setpoints and limits can also be varied from the PC.

Sequencing software for up 10 boilers is also available allowing the operator to select any boiler as the lead boiler. As the demand increases the burners progressively move to "high fire" leaving the last two boilers brought "online" to "modulate".

As the demand decreases boilers progressively move from "high fire to "modulating" and then from "modulating to "off-line". Three pass code levels ensure that unauthorized personnel cannot service the burners nor change commissioning data. The unit has extensive self diagnostics with primary and secondary level fault analysis.

Table of Contents

This bulletin describes the installation and commissioning of the PPC5000 fuel / air ratio controller. It may be used in conjunction with the following other bulletins:

— Nexus NEX-1001 bulletin
— ComFire combustion analysis tool user bulletin
— Nexus / PPC5000 boiler sequencing bulletin

Description 1
Safety information 4
Installation 5
Mounting the display 6
Circuit board removal 7
Option link selection 8
Servo-motor Selection 9
Wiring 10
Operation in run mode 16
Start-up sequence 19
Modulation 20
Safety shutdown (burner lockout) 20
The display 21
Motor adjustment 24
Feedback potentiometer 24
Control direction 24
Adjusting microswitch positions 24
Locking the servo-motor to the valve shaft 25
Operation in commissioning mode 26
Commissioning data 26
Option set mode 27
Commission ratio mode 28
Adjust ratio mode 29
Finding the software issue & unit configuration 31
The oxygen trim option 32
Oxygen probe description 32
Installation of oxygen probe 33
Wiring 35
Interface to auxiliary equipment 37
Calibrating and servicing the oxygen probe 38
Removing the oxygen probe 39
SOx, NOx, smoke, CO, AUX1, AUX2, O/P1, O/P2 40
Oxygen trim operation 40
Commissioning oxygen trim 40
Flow calculation table 43

Troubleshooting 45
Inverter (variable speed) drives 47
System configuration 47
Description of control method 48
Setting up the inverter for use with the 5000 48
Setting up the 5000 for use with a inverter drive 49
Troubleshooting inverter problems 50
Option parameters 51
Option parameter selection of profiles and drives 72
Derivation of modulation rate 73
Faults and fault finding 74
Fault listing 75
The engineer’s key 79
Troubleshooting 84
Technical specification 87
Oxygen probe kit 89
5000 Commissioning sheet 89
Option parameters 90
Distribution board connections 91
AH221250 (for use with 2 x IDB) 91
AH221312 (for use with 1 x IDB & 1 x FMI) 92

SAFETY INFORMATION

WARNING: The equipment in this manual is capable of causing property damage, severe injury or death. It is the responsibility of the owner or user to ensure that the equipment described herein is installed, operated and commissioned in compliance with the requirements of all national and local legislation which may prevail.

When this equipment is mounted on a burner/boiler, due regard must be given to the requirements of that appliance.

Before attempting to install, commission or operate this equipment, all relevant sections of this document must be read and fully understood. If in doubt about any requirements consult the supplier. Installation, commissioning or adjusting of this product MUST be carried out by suitably trained engineers or personnel qualified by training and experience.

The manufacturer of this equipment accepts no liability for any consequences resulting from the inappropriate, negligent or incorrect installation, commissioning or adjustment of operating parameters of the equipment.

This equipment MUST only be mounted on to burners as detailed in the contracted specification. The supplier must approve any change in the specification in writing.

Control panels MUST NOT be left uncovered while power is on. If it is essential to do so while rectifying faults, only personnel qualified by training and experience should be involved.

The time any covers are off must be kept to a minimum and warning notices MUST be posted.

Before attempting any work on this equipment, the electrical supplies MUST be isolated.

Safety interlocks MUST NOT be removed or over-ridden. Any faults detected MUST be corrected before the unit is operated.

CAUTION: Some versions of this equipment contain a lithium battery.

Note: *The manufacturer of this equipment has a policy of continual product improvement and reserves the right to change the specifications of the equipment and the contents of this manual without notice.*

WARNING: Explosion of fire hazard can cause property damage, severe injury or death. To prevent possible hazardous burner operation, verification of safety requirements and interlocks must be performed each time a control is installed on a burner.

INSTALLATION

BEFORE INSTALLING THE PPC5000 CONTROL

CAUTION: Ensure that electric power is turned off. Refer to SN-100 for recommended grounding techniques.

Be aware that power to some interlocks (operating controls, air flow switches, modulating circuits, etc.) may be derived from sources other than what is controlling the PPC5000.

Wiring Base

Install the PPC5000 where the relative humidity never reaches the saturation point. The PPC5000 system is designed to operate in a maximum 80% relative humidity continuous, non-condensing environment. Do not install the PPC5000 system where it can be subjected to vibration in excess of 0.5G continuous maximum vibration. The PPC5000 system is not a weather tight enclosure.

Wiring must comply with all applicable codes, ordinances and regulations.

1. **Wiring must comply with NEC Class 1 (Line Voltage) wiring.**
2. Limits and interlocks must be rated to simultaneously carry and break current to the ignition transformer, pilot valve and main fuel valve(s).
3. Recommended wire routing of lead wires:
   a. Do not run high voltage ignition transformer wires in the same conduit with any other wires.
   b. Do not route flame detector lead wires in conduit with line voltage circuits. Use separate conduit where necessary.
4. Maximum wire lengths:
   a. The maximum lead wire length is 200 ft. (61 meters) to terminal inputs (Operating limits, interlocks, valves, etc.).
   b. Modbus communications: The maximum cable length of wire is 3200 feet (1000 meters) for RS-485.

Mounting the Control Unit

This section contains basic installation information concerning the PPC5000 system (controller and panel-mounted display), the servo-motors and the wiring.

The control unit is designed to be fitted inside the burner control cabinet. The cabinet should have a minimum protection level of NEMA 12 (IP40) for indoor use, or NEMA 4 (IP54) for outdoor use.

The control unit should be mounted so that the circuit boards within it are vertical, to maximize cooling efficiency.

A clearance is required of a least 80mm above and 20mm below and at the sides of the controller enclosure.

The operating temperature range of the equipment is 0 to 60°C.

FIGURE 1.

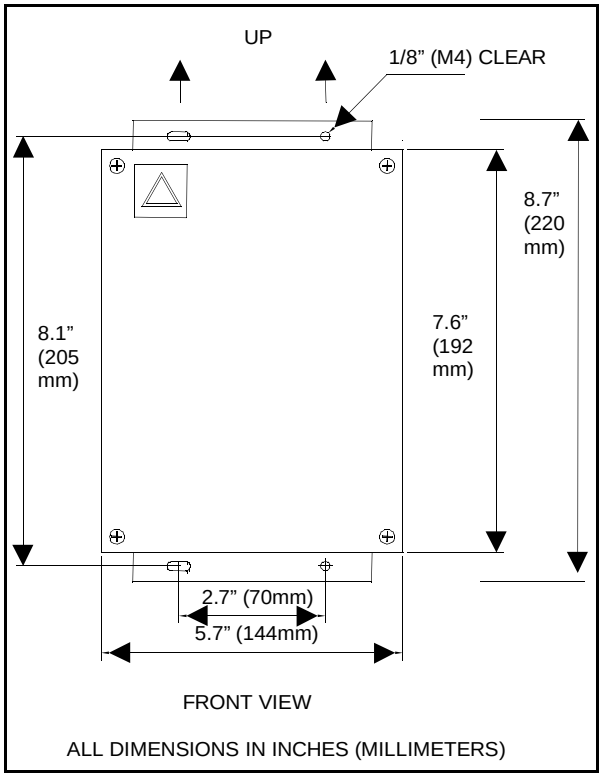

FIGURE 2. **Mounting the Display**

The display should be mounted on the front of the burner cabinet, or similar accessible location, as close to the controller as is practical.

Refer to factory for cable recommendations if the display's cable length needs to be extended.

It extends for [40mm]/[1.6in] behind the panel, and [5mm]/0.2in] in front of the panel.

The maximum allowable panel thickness is [7mm]/[0.3in].

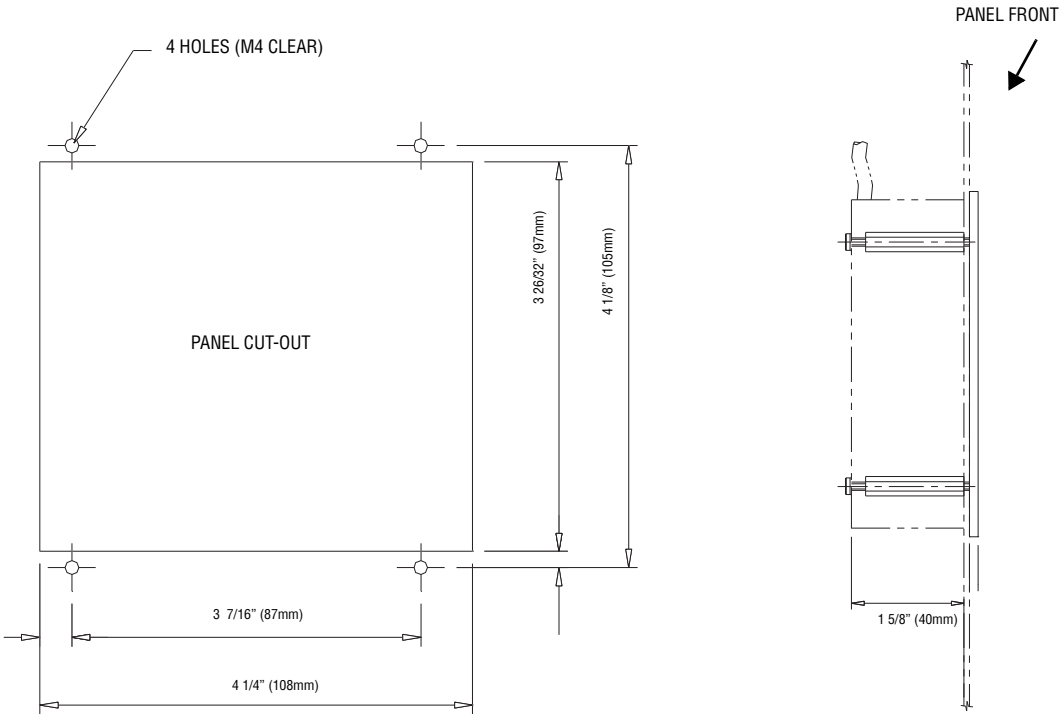

WIRING CONNECTIONS

DISPLAY	CONTROLLER PPC5000
1 = 5v	PA8
2 = KEY RETURN	PA9
3 = DATA	PA10
4 = CLOCK	PA11
5 = STROBE	PB3
6 = GROUND	PA15

Circuit Board Removal

Please refer to the exploded unit drawing below.

5. Disconnect the unit's power supply.
6. Undo the four screws and remove the grey plastic lid to expose the connectors.
7. Remove all the connectors.
8. Undo the four hexagonal pillars, and lift away the retainer frame.
9. Carefully remove the distribution board.
10. Each of the daughter boards can now be removed as required by pulling on the edge of the PCB (**do not pull the connector strips)**.

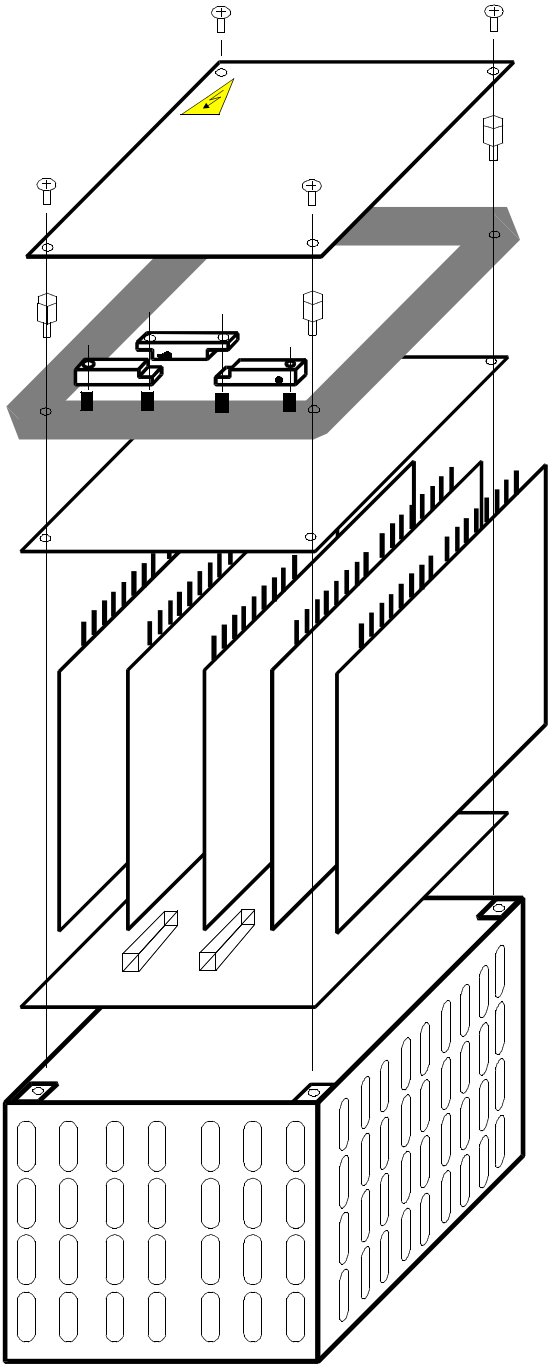

Option Link Selection

The unit has a number of option selection links, located on various boards. The function and settings are marked along side each link. These links must be set to the correct position before power is applied.

Power Supply Voltage

The 5000 control system must be set for the correct supply voltage.

The supply voltage is selected via a link arrangement on the power supply board. The possible supply voltages are tabulated below, together with the necessary fuse rating.

SUPPLY VOLTAGE (V)	LINKS REQUIRED	FUSE RATING (mA)
110	LK1 AND LK3	315 ANTI-SURGE
120	LK4 AND LK6	315 ANTI-SURGE
220	LK2 AND PARK	160 ANTI-SURGE
240	LK5 AND PARK	160 ANTI-SURGE

In order to set these links and fit the correct supply fuse, the power supply board must be removed (see Circuit board removal).

Boiler Pressure and Temperature Sensor Type and Supply

If a boiler pressure/temperature sensor or modulation potentiometer is used, the links LK9 and LK10 on the power supply board must be set to suit the type of sensor. For example:

For a 4-20mA loop-power sensor, choose a +20V supply with current (I) input.

For a 0-5V modulation potentiometer, choose a +5V supply with voltage (V) input

Ensure that option parameter 3.2 is set to match this jumper position.

Potentiometer Supply Voltage

The 5000 can either supply +5v or +15v DC to the potentiometers.

If the potentiometer moves over its entire 270º range for 90º of servo-motor travel, select a +5v supply.

If the potentiometer is a 340º type but only moves over 90º of its range for 90º of servo-motor travel, select a +15v supply.

For the basic drive board, a single jumper link (LK1) is fitted which determines the supply voltage for all four feedback potentiometers connected to the board. The position for each supply voltage is printed on the circuit board adjacent to the jumper.

For the isolated drive board, two jumper links are fitted which determine the supply to each of the two feedback potentiometers connected to the board. The positions for each supply voltage are printed on the board next to the link. LK1 selects the supply voltage for feedback potentiometer 1.

In order to set the feedback potentiometer supply jumpers, the boards must be removed from the enclosure. For details of how to do this, see Circuit board removal.

POTENTIOMETER TYPE	SUPPLY VOLTAGE	MINIMUM POTENTIOMETER VALUE (Ohms)	MAXIMUM POTENTIOMETER VALUE (Ohms)
270° with full travel	5V	1K	5K
340° with 90° travel	15V	3K	15K

RS485 TERM (RS485 serial communications termination resistor)

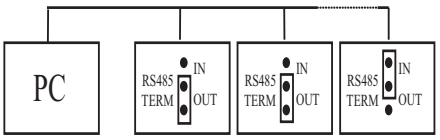

The position of this link is important only if the RS485 serial communications are to be used. The two units at the end of the communications bus should have this link set to the IN position. All other units should have the link set to the OUT position. If only two units are on the communications bus, set the links on both units to the IN position.

This link is LK1 on the burner interface board.

SERVO-MOTOR SELECTION

Motor Requirements

Since the servo-motors are not always supplied as part of the 5000 system, a few guidelines are useful when selecting suitable motors other than those supplied by Fireye.

- All servo-motors must be of the same operating voltage, not exceeding 250V rms / 50V rms depending on board type.
- All motors must be AC
- The servo-motor current must not exceed 150mA rms / 750mA rms depending on board type.
- If the motor voltage is lower than the mains supply voltage then a suitable power supply (such as a transformer) must be provided
- The motor supply to the 5000 must be protected with a suitable fuse for the motors being used. **The fuse must not exceed 3A** to ensure that damage to the control unit does not occur
- The servo-motor time for 90° movement must not be less than 10 seconds or more than 60 seconds
- All servo-motors must have internal limit switches fitted which are adjusted to prevent excessive rotation
- All servo-motors must be able to drive the load imposed on them
- All servo-motors must have suitable protection for the burner environment (for example, IP65 for applications exposed to the weather).

If in any doubt about a particular servo-motor's suitability, seek confirmation from your equipment supplier, who have a list of suitable motors.

Potentiometer requirements

All servo-motor potentiometers should be good quality plastic film types, with high resolution.

Depending on the supply voltage, a minimum resistance is allowed for the feedback potentiometers to prevent excessive current consumption. See section 1 - Potentiometer supply voltage on page 8 for details.

The potentiometer must be securely fixed to the output shaft of the gearbox in such a way as to give accurate indication of the shaft position under all conditions and at all times.

Wiring

WARNING: Wiring Installation must be carried out by a competent electrician and is subject to I.E.E. wiring regulations (BS 7671:1992) and/or local standards.
Hazardous voltages must be isolated before service work is carried out.

The clamping bar on the control unit performs only an earth function and does not provide strain relief. Secure all cables carried in conduit at both ends using a suitable anchorage method in the cabinet.

If the mains power is known to be noisy or suffer from occasional brown-outs or black-outs then a correctly rated (20w) un-interruptible power supply (UPS) should be used to ensure a clean continuous mains power supply to the 5000 controller. This must be located as close as possible to the unit.

To comply with EMC requirements, wire the control unit using the specified cable sizes and shield connections. Clamp all signal cable shields to ground using the clamping bar provided on the control unit. Connect all cable shields to ground at the control unit end only, with the exception of the cables that connect the display and pressure sensors. Use Belden 8735 or equivalent.

The unit case and PA6 must be connected to Ground.

Using the Cable Clamp

A clamping bar is provided on the control unit for termination of cable screens where necessary.

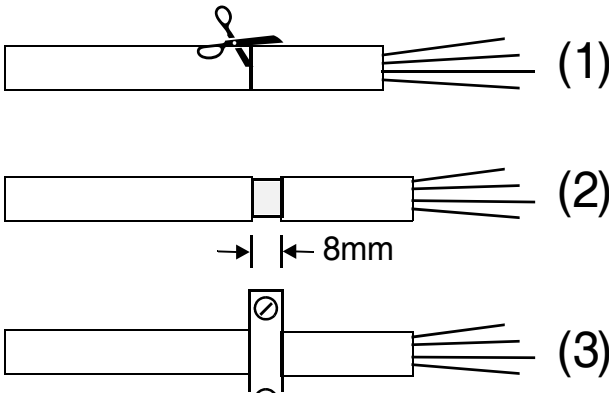

(1) The cable should be prepared by cutting around the outer sleeve, taking care not to damage the screen (1).

(2) Pull the sleeving apart to expose 1/3” (8mm) of the screen (2).

(3) Place the exposed length of screen under the clamp bar and tighten the screws (3).

LIVE and NEUTRAL Supply

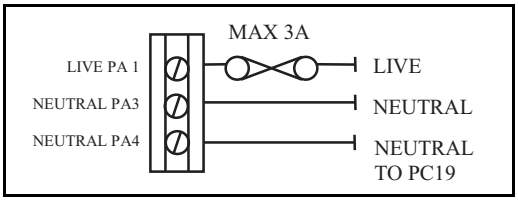

The LIVE and NEUTRAL supplies must be connected using multi-strand single core PVC insulated 16/0.2mm wire. The live connection should be fused with a maximum rating of 3A.

The NEUTRAL connection for PC19 must be wired to PA4. The NEUTRAL for PC19 must not come from anywhere else.

Interface to Burner Controller Units

WARNING: Although the 5000 system has an optional software controlled postpurge this MUST NOT be used to replace the pre-purge as dictated by the chosen burner controller.

Please note whatever burner controller is being used that the PPC 5000 must be wired so that a safety shutdown will switch off the burner.

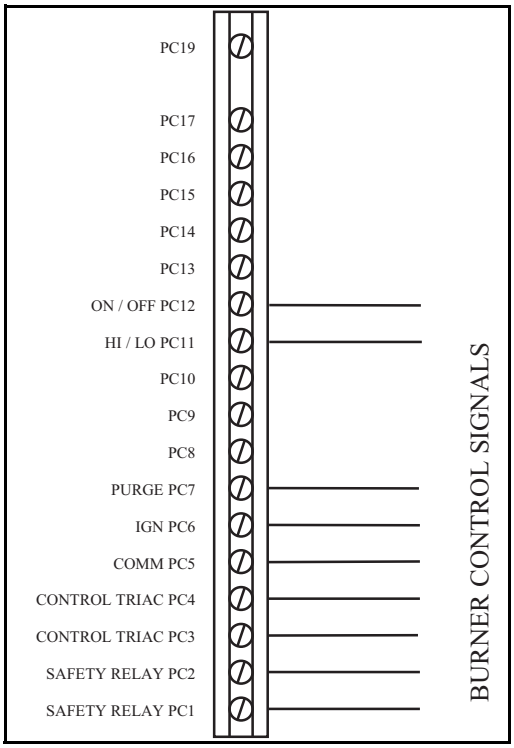

Since many different burner controller units can be used with this system, it is only intended that guidance on interconnection be given in this bulletin. Specific information for interconnection to approved "burner controllers" should be obtained from the manufacturer. Alternatively specific information should be obtained by reference to the supplier of this equipment.

These connections must be wired using single conductor TEW, AWM or MTW within the cabinet. Conductors to be pulled through conduit should be THHN or TFFN.

Maximum wiring size is 16 AWG.

Fuel, auto/man (H/A), up, down, aux 1 and aux 2 inputs

These inputs must be connected using multi-strand single core PVC insulated 16/0.2mm wire. Note that these inputs expect high voltage mains signals with the same phase as the mains supply on PA1.

The three fuel selection inputs are used to determine which profile the unit selects. Each profile can fire any combination of the three different fuels.

PROFILE 1 INPUT (PC13) OFF	PROFILE 2 INPUT (PC14) OFF	PROFILE 4 INPUT (PC17) OFF	PROFILE SELECTED NONE BURNER OFF
ON	OFF	OFF	1
OFF	ON	OFF	2
ON	ON	OFF	3
OFF	OFF	ON	4
ON	OFF	ON	5
OFF	ON	ON	6
ON	ON	ON	7

The two auxiliary inputs can be configured via option parameters to provide / override various status inputs such as fault mute, burner on etc.

If the hand/auto (H/A) input is off, the UP and DN inputs will have no effect, and the unit will modulate automatically.

If the hand/auto (H/A) input is on, the UP input will cause the modulation rate to increase if it is energized, and the DN input will cause the modulation rate to decrease if it is energized.

Motor Up/Down Outputs and Feedback Potentiometer Inputs

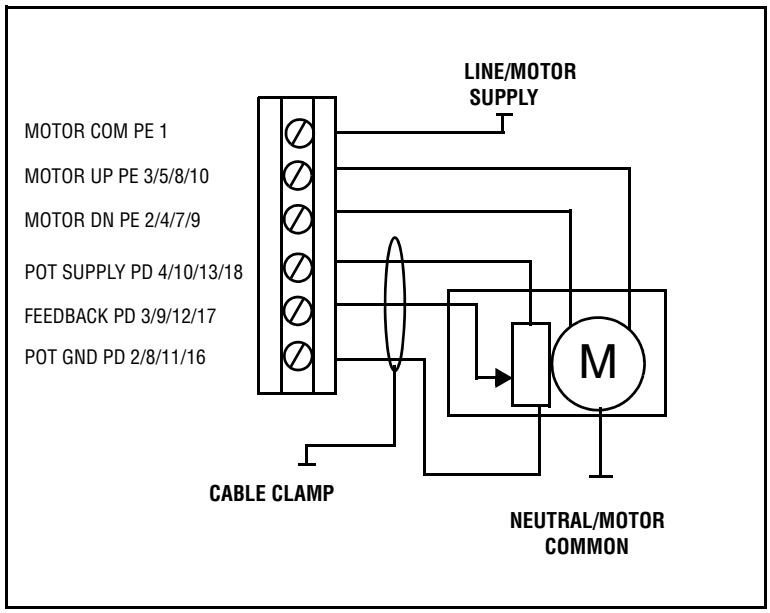

The motor up/down outputs should be connected using single conductor TEW, AWM or MTW within the cabinet. Conductors to be pulled through conduit should be THHN or TFFN. Maximum wiring size is 16 AWG. The connections to the motor should be made via its switched inputs, so that the internal micro switches prevent the motor being damaged if it is driven to either end of its travel.

Motor feedback potentiometer cabling must be overall shielded 3-conductor PVC insulated Belden 8735 or similar. Since this cable may be run in conduit with the motor drive wiring, its voltage rating must exceed the maximum voltage carried by any other cable in the same conduit.

Connect the shield with the use of the clamping bar.

Make all connections at the servo-motor first. Incorrect connection may damage or destroy the motor potentiometer.

Pressure/Temperature Sensor Input

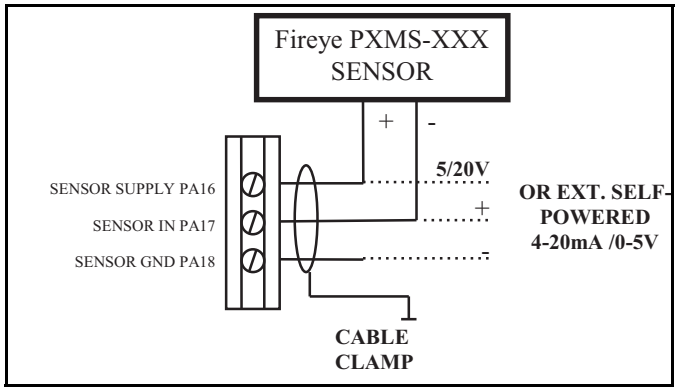

The pressure/temperature cabling must be overall shielded 3-conductor Belden 8735 or similar. Since this cable may be run in conduit with high voltage wiring, its voltage rating must exceed the maximum voltage carried by any other cable in the same conduit.

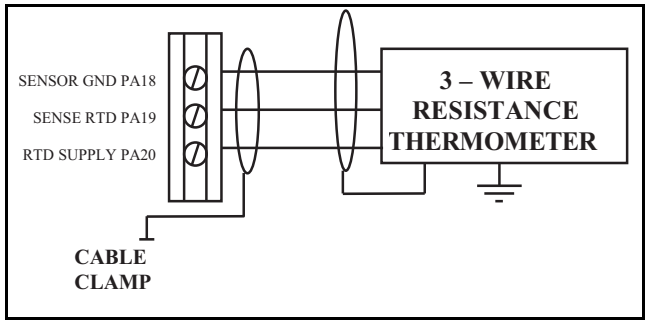

The input is suitable for use with 0-5V or 4-20mA signals (externally or internally powered), the PXMS-XXX steam pressure sensor, or a three wire resistance thermometer.

Refer to the option links section for details on setting the correct voltage and input type.

Connect the cable shield to the controller with the use of the clamping bar.

Make all connections at the sensor/transmitter first.

RS485 / RS232

The RS485 cabling must be overall shielded 3-conductor Belden 8735 or similar. Terminate the shield at one unit only using the cable clamp provided.

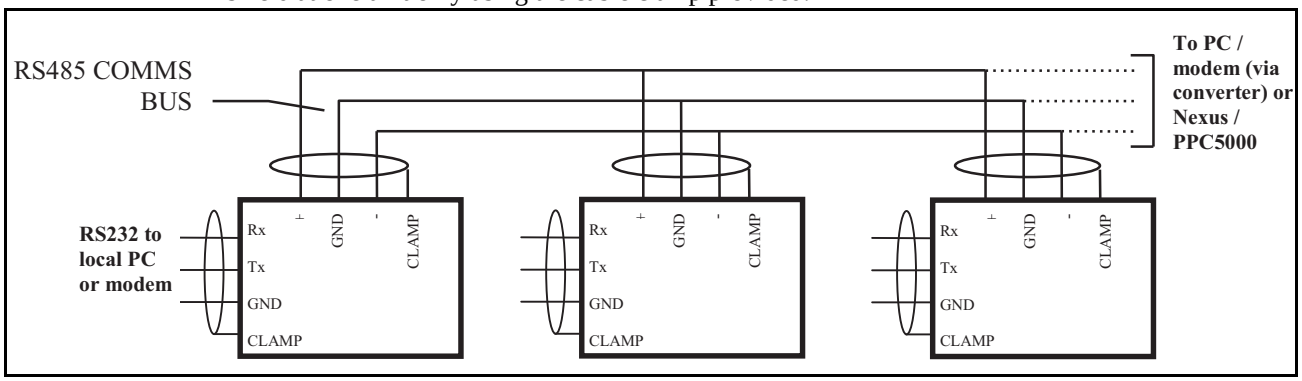

For details on connecting NEXUS integrated burner controllers, PPC5000 fuel/air ratio controllers and a PC onto the communications bus, refer to bulletin NEX-1501 (ComFire combustion analysis tool) or NEX-SO (boiler sequencing).

Controlled Shutdown Triac and Safety Shutdown Relay

The controlled shutdown triac should be wired into the ”stat" circuit to switch the burner on/off as the temperature/pressure reaches the limit condition.

The safety shutdown relay **must** be wired to ensure that the burner is immediately switched off if the relay opens, to prevent any hazardous condition occurring. See recommended interface wiring for details of how this is accomplished via connection to burner controllers.

PURGE and IGN Outputs

The PURGE (PC7) terminal will be connected to the COM (PC5) terminal when the 5000 is at purge position.

The IGN (PC6) terminal will be connected to the COM (PC5) terminal when the 5000 is at the ignition position.

See Appendix for details of how these terminals should be interfaced to burner controllers.

HI/LO Input

This input is active during start-up only.

When this terminal is connected to mains potential, the 5000 will move to purge position. When this terminal is not connected to mains potential, the unit will move to ignition position.

See Interface to Burner Control Units section on page 11 for details of how these terminals should be interfaced to burner controllers.

Alarm Relay

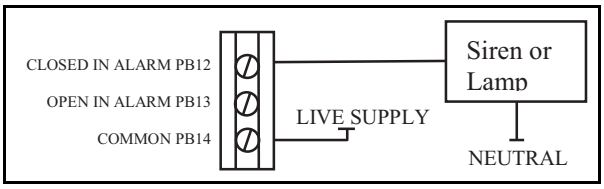

This is provided to add an external siren or lamp for indication of a unit fault or flue gas alarm limit. **The alarm relay must not be used to shutdown the burner. This function is provided by the safety shutdown relay.**

Digital Outputs

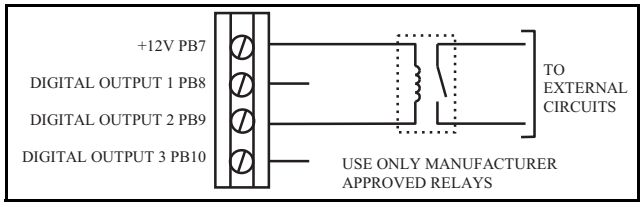

The digital outputs are set-up via option parameters 16.1, 16.2, & 16.3.

The outputs are intended to drive external relays, as shown here for output 2.

Remote Setpoint

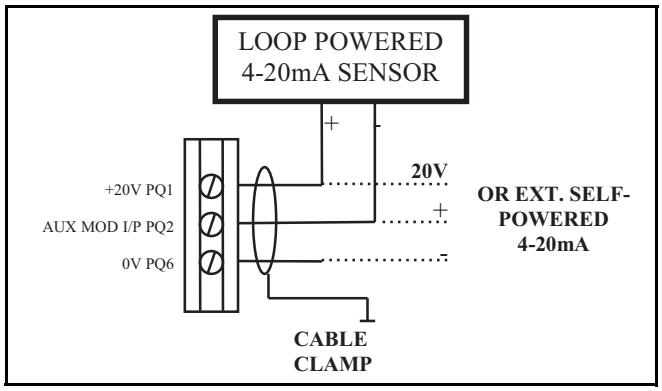

The remote setpoint input is available as a 4-20mA current input. It connects to terminal PQ2, labeled “AUX MOD I/P”. For details relating to zero and span adjustment see Option Parameter section. See option 3.3.

Final Checks

Before applying power, make the following checks:

- The unit is set for the correct line supply voltage.
- All other link positions are correct.
- All fuses within the unit are intact and of the correct value.
- All wiring and connections have been made according to the specifications detailed in this section.
- The Feedback Potentiometer is wired correctly. Terminal 6 on the servo-motor MUST be wired to PD 3/9/12/17 depending on the motor mapping. See option 20.

Operation in Run Mode

Start-up Sequence

When a fuel selection is made, and the 'burner select' signal is given, the burner will start up. The control unit will run through the sequence described below.

No	Name	Description
0, 1	**INITIALIZE**	The unit has just been powered up. If there are no faults, the unit will immediately proceed to status 3. Otherwise, it jumps to status 2.
2	**SAFETY SHUTDOWN**	There is a safety critical fault present which is preventing the burner from being fired safely. All drives (motors and inverters) are driven to their close (P0) positions. The safety shutdown output (PC1-2) and controlled shutdown output (PC3-4) are both open circuit. See Faults and fault finding section.
3	**BURNER OFF**	The safety shutdown output (PC1-2) is closed but the controlled shutdown output (PC3-4) is open, preventing the burner from firing. The unit will proceed to status 4 if: — Burner select input (PC12) is off (EK5 = 0) — High/low initiate input (PC11) is off (EK4 = 0) —þMeasured value below low control limit (EK14 = 1) If the burner select input (PC12) is on for more than 3 seconds, the unit will go to status 2 with F56. All drives (motors and inverters) are driven to their close (P0) positions.
4	**WAIT FOR PURGE**	The safety shutdown output (PC1-2), the controlled shut down output (PC3-4) and the ignition prove output are all closed. The unit will proceed to status 5 if: — A valid profile is selected using PC13, 14 and/or 17 — Burner select input (PC12) is on (EK5 = 1) — High/low initiate input (PC11) is on (EK4 = 0) — All drives (motors and inverters) are driven to their close (P0) positions.
5	**PROVE CLOSE** **(P0) POSITIONS**	The safety shutdown output (PC1-2), the controlled shut down output (PC3-4) and the ignition prove output are all closed. All selected motors are driven fully down, and 4mA is output to the inverters. The unit will proceed to status 6 if: — All drives have stopped moving and match their close (P0) positions to within ±5° (or ±55 for inverters). — Burner select input (PC12) is on (EK5 = 1) — High/low initiate input (PC11) is on (EK4 = 1) — The inverter stop time (option parameter 22.4) has expired If the burner select (PC12) or high/low initiate (PC11) inputs are turned off or the profile selection (PC13, 14 and/or 17) is changed, the unit returns to status 3.

		If any of the measured drive positions do not match P0, the unit will change to status 2 with a drive positioning fault.
6	**PROVE PURGE (P1) POSITIONS**	The safety shutdown output (PC1-2) and the controlled shutdown output (PC3-4) are both closed. All selected motors are driven fully up, and 20mA is output to the inverters. The unit will proceed to status 7 if: — All drives have stopped moving and match their purge (P1) positions to within ±5° (or ±55 for inverters). — Burner select input (PC12) is on (EK5 = 1) — High/low initiate input (PC11) is on (EK4 = 1) If the burner select (PC12) or high/low initiate (PC11) inputs are turned off or the profile selection (PC13, 14 and/or 17) is changed, the unit returns to status 3 (or status 13 if a post purge has been selected using option parameter 09.1). If any of the measured drive positions do not match P1, the unit will change to status 2 with a drive positioning fault.
7	**PRE-PURGE (CLOSING FUEL DRIVES)**	The safety shutdown output (PC1-2), the controlled shutdown output (PC3-4) and the purge prove output (PC5-7) are all closed. All selected air and option drives are driven to their purge (P1) positions. All selected fuel drives are driven to their close (P0) positions. The unit will proceed to status 8 when all fuel drives have stopped moving. The high/low initiate input (PC11) is ignored. If the burner select input (PC12) is turned off or the profile selection (PC13, 14 and/or 17) is changed, the unit returns to status 3 (or status 13 if a post purge has been selected using option parameter 09.1). If the measured air or option drive positions do not match P1, the unit will change to status 2 with a drive positioning fault.
8	**PRE-PURGE**	The safety shutdown output (PC1-2), the controlled shutdown output (PC3-4) and the purge prove output (PC5-7) are all closed. All selected air and option drives are driven to their purge (P1) positions. All selected fuel drives are driven to their close (P0) positions. The unit will proceed to status 9 when the high/low initiate input (PC11) is turned off. If the burner select input (PC12) is turned off or the profile selection (PC13, 14 and/or 17) is changed, the unit returns to status 3 (or status 13 if a post purge has been selected using option parameter 09.1). If the measured air or option drive positions do not match P1, the unit will change to status 2 with a drive positioning fault.
9	**MOVING TO THE IGNITION**	The safety shutdown output (PC1-2) and the controlled shutdown output (PC3-4) are both closed.

	POSITION	All selected drives (motors and inverters) are driven to their ignition (P2) positions. The unit will proceed to status 10 if: — The drives have stopped moving. — If selected, a 'release to ignite' signal is received via serial comms or an auxiliary input (see option parameters 15.1 and 15.2) If the burner select input (PC12) is turned off, the profile selection (PC13, 14 and/or 17) is changed or the high/low initiate input (PC11) is on, the unit returns to status 3 (or status 13 if a post purge has been selected using option parameter 09.1).
10	**IGNITION**	The safety shutdown output (PC1-2), the controlled shutdown output (PC3-4) and the ignition prove output (PC5-6) are all closed. All selected drives (motors and inverters) are driven to their ignition (P2) positions. The unit will proceed to status 11 when the ignition time has expired (see option parameter 08.1) If the burner select input (PC12) is turned off, the profile selection (PC13, 14 and/or 17) is changed or the high/low initiate input (PC11) is on, the unit returns to status 3 (or status 13 if a post purge has been selected using option parameter 09.1). If the measured drive positions do not match P2, the unit will change to status 2 with a drive positioning fault.
11	**MOVING TO THE LOW FIRE POSITION**	The safety shutdown output (PC1-2) and the controlled shutdown output (PC3-4) are both closed. All selected drives (motors and inverters) are driven to their low fire (P3) positions. The unit will proceed to status 12 if: — The drives have stopped moving. — The low fire hold time has expired (see option parameter 8.2) — If selected, a 'release to modulate' signal is received via serial comms or an auxiliary input (see option parameters 15.1 and 15.2) If the burner select input (PC12) is turned off or the profile selection (PC13, 14 and/or 17) is changed the unit returns to status 3 (or status 13 if a post purge has been selected using option parameter 09.1). The high/low initiate input (PC11) is ignored. If the drive positions are outside the ignition and low fire positions, the unit will change to status 2 with a drive positioning fault.
12	**MODULATION**	The unit modulates all selected drives in ratio to the required modulation rate. Trim will be applied after the transport delay has expired (if selected). The modulation may be limited by the oxygen trim function (see EK77 & EK78). If the burner select input (PC12) is turned off, the profile selection (PC13, 14 and/or 17) is changed or the measured

value exceeds the high control limit, the unit returns to status 3 (or status 13 if a post purge has been selected using option parameter 09.1).

The high/low initiate input (PC11) is ignored.

If any selected drive deviates from its profile setpoint, the unit will change to status 2 with a drive positioning fault.

13	**MOVING TO POST PURGE**	The safety shutdown output (PC1-2) is closed but the controlled shutdown output (PC3-4) is open, preventing the burner from firing. All selected air and option drives are driven to their purge (P1) positions. All fuel drives are driven to their close (P0) positions. The unit will proceed to status 14 when the air and option drives have stopped moving. The burner select input (PC12), fuel select inputs (PC13, 14 and 17) and the high/low initiate input (PC11) are ignored.
14	**POST PURGE**	The safety shutdown output (PC1-2) and the controlled shutdown output (PC3-4) are both closed. All selected air and option drives are driven to their purge (P1) positions. All fuel drives are driven to their close (P0) positions. The unit will return to status 3 when the post purge time has expired (see option parameter 09.1). The burner select input (PC12), fuel select inputs (PC13, 14 and 17) and the high/low initiate input (PC11) are ignored. If the measured air or option drive positions do not match P1, the unit will change to status 2 with a drive positioning fault.

Startup sequence

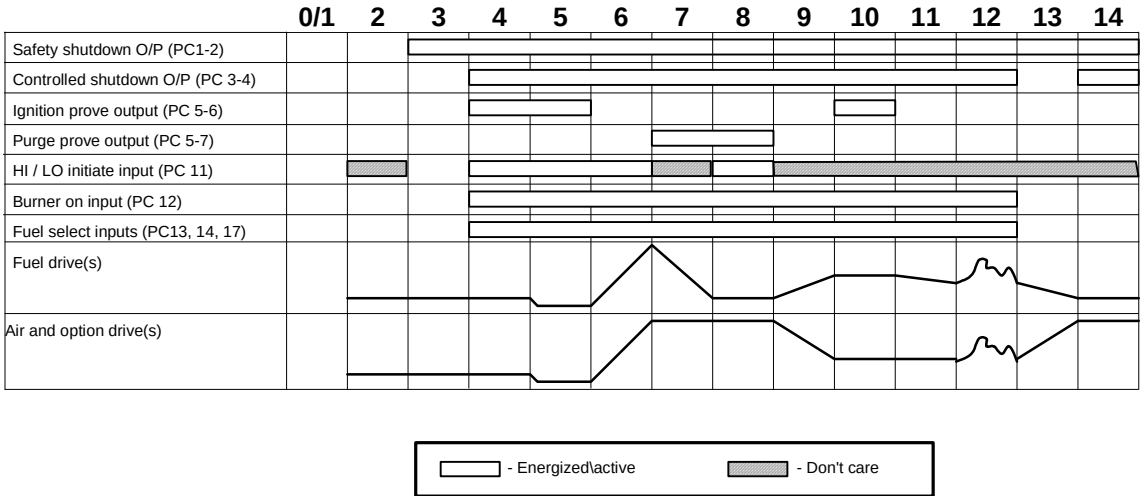

Modulation

During stage 12 (modulation), the unit will position the fuel and air motors as programmed for the profile selected.

In auto modulation mode, the system will modulate as necessary to either track the input or maintain the pressure/temperature of the boiler at the entered setpoint (See Option parameters section). If boiler sequencing is enabled and active, the unit will start, stop and modulate according to instructions issued from the unit controlling the lead boiler.

In manual modulation mode, the system will either modulate in response to the keyboard up/down keys or the external up/down signals.

Safety Shutdown (Burner Lockout)

A safety shutdown will occur under the following conditions:

- In stages 5, 6, 7, 8, 10, 11, 12, or 14, if a drive is not in the correct position.
- During stage 6, a drive speed has been measured to be outside the allowable range.
- During modulation (stage 12), an oxygen trim limit has been reached, and this has been configured to shut the burner down (see option parameter 39.0).
- In any stage, if an internal or external fault not previously mentioned occurs which may affect the safe operation of the burner.

The display is a 2 line 20 character per line dot matrix vacuum fluorescent unit allowing the use of plain text messages for most display parameters. The display must be fitted to allow commissioning of the system but once commissioning has been completed, the display may be removed, providing either the control unit lamps and external switches and/or lamps are fitted for fault indication and reset.

The Display

The display is a 2 line 20 character per line dot matrix vacuum fluorescent unit allowing the use of plain text messages for most display parameters. The display must be fitted to allow commissioning of the system but once commissioning has been completed, the display may be removed, providing either the control unit lamps and external switches and/or lamps are fitted for fault indication and reset.

Ensure that the power is off when connecting or disconnecting the display.

Description of keys

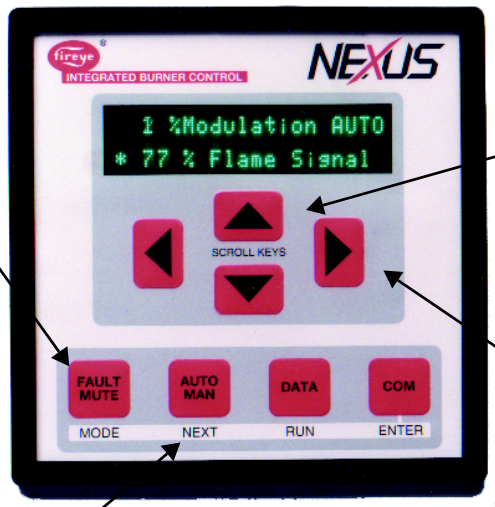

Press the FAULT MUTE key to mute (open) the alarm relays.

Hold the FAULT MUTE key down for approximately two seconds to remove any cleared faults.

The UP/DOWN keys are used to adjust the fire rate in the manual modulation mode.

In commission mode, they are used for data entry.

The SCROLL keys are used to select the current parameter for the display.

In the commission mode, these keys select which parameter is to be adjusted with the use of the UP/DOWN keys.

Selects manual burner modulation.

The UP/DOWN keys may be used to alter the firing rate.

Description of display parameters

The Fireye display will indicate all display information as plain text messages, with the exception of the engineer's key values. Engineer's key information is found by pressing the Fireye Logo. Press once to see status and subset information and again to see EK values. Press again to return to normal display

FUEL 1-3 AIR 1-4 OPTION 1-5	Indicates the position of each drive (up/down motor or inverter) connected to the system. For a motor drive, the display may be in terms of angular degrees or percentage opening. For an inverter the display is 0 – 999. When the burner is on, only the drives currently firing will be available.
MEASURED VALUE	Indicates the measured pressure or temperature of the boiler, according to the zero and span values entered as option parameters. If the input cur rent drops below 3.5mA, the display will flash "Lo". If the input current rises above 21mA, the display will flash "Hi". This display parameter is not available if tracking modulation input is selected.

SETPOINT	Indicates the required pressure or temperature of the boiler, according to the zero and span values entered as option parameters. If a tracking modulation input is selected, this display parameter shows percentage rate.
EFFICIENCY	Indicates the calculated percentage net or gross efficiency of the boiler, according to option parameter 36.0. This display parameter may not be available, depending on option parameter and hardware set-up.
FLUE TEMP	Indicates the measured flue temperature in degrees Celsius or Fahrenheit (depending on option parameter set-up). If the wiring to the flue temperature thermocouple is incorrect or the thermocouple is faulty, the display will flash "Hi" or “Lo”. This display parameter may not be available, depending on option parameter and hardware set-up. This display flashes if the high or low flue temperature limits are transgressed (option parameter 37.X & 38.X).
INLET TEMP	Indicates the measured inlet air temperature in degrees Celsius or Fahrenheit (depending on option parameter set-up). If the wiring to the inlet temperature sensor is incorrect or the sensor is faulty, the display will flash "Hi" or ‘Lo’. This display parameter may not be available, depending on option parameter and hardware set-up.
FAULT NUMBER	If no faults are present, this display parameter will not be available. If the unit detects an internal or external fault, this display will indicate the number of that fault.
O_2 LEVEL	Indicates the measured flue oxygen level in terms of percentage concentration. If the wiring or oxygen probe is faulty, or if the probe has not reached it’s operating temperature yet, this display will show ‘---‘. This display parameter may not be available, depending on option parameter and hardware set-up. This display flashes if the high or low flue oxygen limits are transgressed.
CO_2 LEVEL	Indicates the calculated CO_2 level in flue. This display parameter may not be available, depending on option parameter set-up, hardware set-up and oxygen display. This display shows ‘---‘ when the burner is not firing, or the oxygen value is showing ‘---‘.
SMOKE LEVEL SOx LEVEL CO LEVEL NOx LEVEL	Indicates the measured flue gas level. These option parameters may not be available, depending on option parameter and hardware set-up. “Hi” or “Lo” is shown if outside range 3.5 to 21mA. Values flash if limits are exceeded.
HOURS RUN	Displays the hours run for the current fuel combination. If no profile is selected, the display will show "---".
Pn	This display parameter is used in commission ratio.
An	This display is used in adjust ratio mode. They indicate the profile setpoint currently under adjustment or being dis played. If the display is flashing, the unit is waiting for an event to occur before the point may be altered. When the display stops flashing, the point may be altered. PROFILE SET is not available in run mode.
MODULATION	This is the percentage modulation rate based on the position of the lead drive, where 0% is low fire and 1000% is high fire.
FUEL	Displays the fuel combination currently selected, where the 100's digit is fuel 1, the 10's digit is fuel 2 and the 1's digit is fuel 3. e.g. 100 represents fuel 1, 101 represents fuels 1 + 3 and 010 represents fuel 2.

STATUS	This display parameter is used to indicate the burner status. In the event of a safety shutdown the display will flash the burner status at which the safety shutdown occurred
TRIM	Indicates the amount of trim currently being applied, in terms of percentage flow deviation, from -25 to 25. If trim is selected but not currently available (e.g. the burner is running through the start up sequence, or oxygen probe not up to temperature), the display will show "---". If trim is not selected, the display parameter will not be available.
OPTION SET	This display parameter is used in setup and option set modes to indicate that an option parameter is currently under adjustment. The display parameter is not available in RUN MODE.

MOTOR ADJUSTMENT

Control Direction

It is necessary to ensure that each motor travels in the correct direction when moved using the **UP/DOWN** keys on the keyboard. To do this, follow the procedure below.

1. Enter commission ratio mode.
2. With the display showing P0, use the **UP/DOWN** keys to move each motor. If the displayed position decreases as **UP** is pressed, or decreases as **DOWN** is pressed, reverse the motor output **UP/DOWN** connections.

Check that when the **DOWN** key is pressed, each motor moves its valve towards the closed position.

Feedback Potentiometer

The servo-motor internal feedback potentiometer must be secured within the servo-motor to ensure that there is no possibility that the potentiometer can become disconnected from the motor output shaft.

For each motor, it is necessary to adjust the potentiometer's position relative to its shaft in order to obtain the correct open and closed positions on the display. To do this, follow the procedure below:

1. Move the valve to its fully closed position and adjust the potentiometer's position on the motor shaft so that approximately 1° is shown on the display.
2. Move the valve to its fully open position and check that the display reads approximately 90° or the maximum angular opening required from the servo-motor if this is less than 90°. If the displayed position decreases as the valve is opened, reverse the supply connections to the feedback potentiometer. If the displayed position range is incorrect, check that the correct potentiometer supply voltage has been selected.

Adjusting Microswitch Positions

Each time a burner start-up sequence is initiated, the unit will move the fuel and air damper motors to their closed and purge positions to prove correct motor and potentiometer operation. Each motor must have microswitches fitted to limit the close and purge positions obtainable during this proving operation. To set the microswitch positions, follow the procedure below.

1. Enter commission ratio mode
2. Move each motor to approximately 45°, either by hand or using the **UP/DOWN** keys.
3. Holding the **DOWN** key, tighten up the low limit microswitch until the motor will no longer move down.
4. Holding the **DOWN** key, gradually slacken off the low limit microswitch until the motor starts moving down. Continue to slacken off the microswitch until the motor stops with a reading on the display of approximately 2°.
5. Move the motor up and down a few times to check that the motor stops each time at approximately 2°, and re-adjust the microswitch if necessary. This position will allow for some tolerance in microswitch operation.
6. Hold the **UP** key and tighten up the high limit microswitch until the motor will no longer move up.
7. Holding the **UP** key, gradually slacken off the high limit microswitch until the motor starts moving up. Continue to slacken off the microswitch until the motor stops in the desired purge position. This position does not have to be 90°, but it is recommended that it is more than 45°.
8. Move the motor up and down a few times to check that the motor stops each time at the desired purge position. Repeat steps 3 to 7 if necessary.

Locking the Servo-Motor to the Valve Shaft

Once the control and feedback connections to the servo-motors are correct, each motor must be locked to its valve shaft.

In order to prevent the joint between motor and shaft moving, it is recommended that the device used to link the two items is pinned together.

It is imperative these units remain connected correctly to ensure safe operation of the equipment.

OPERATION IN THE COMMISIONING MODE

WARNING: While the unit is operating in commissioning mode or adjust ratio mode certain safety checks cannot be performed by the Fireye Nexus PPC5000 Fuel Air Ratio Controller and therefore the safety of the system operation is the sole responsibility of the commissioning engineer.

Do not allow fuel to accumulate in the combustion chamber. If fuel is allowed to enter the chamber for longer than a few seconds without igniting, an explosive mixture could result.

It is recommended that you refer to the burner controller equipment manual to which this unit is connected for recommendations concerning flame failure at ignition or any other position.

If any settings in the unit are to be changed, it is necessary to enter a commission mode. Three passcodes are available for this purpose.

- *Supplier passcode* - allows entry to all commissioning modes.
- *Adjust ratio passcode* - allows adjustment of some option parameters and entry to adjust ratio mode.
- *Site passcode* - allows adjustment of some option parameters.

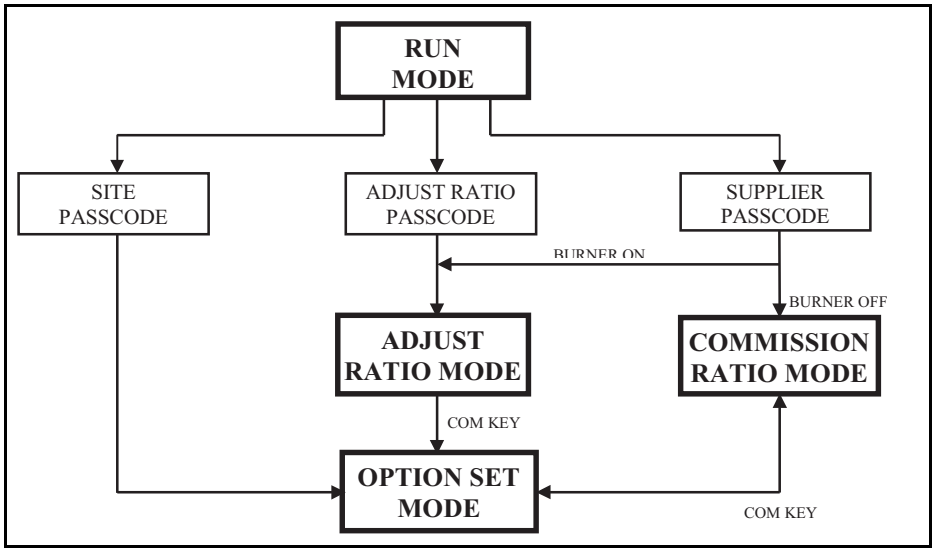

Commissioning Data

Option Parameters

Option parameters contain information about the configuration of the burner and the boiler. Option parameters may be adjusted in option set mode, but it may not be possible to adjust all of them if the burner is on.

Setpoints

Setpoints contain information about required motor positions. Extra setpoints will become available when option cards are inserted.

There are seven tables of setpoints (or seven profiles), each of which may be visualized using the following diagram:

FUEL/AIR RATIO 3	P0 CLOSE SETPOINT	P1 PURGE SETPOINT	P2 IGNITION SETPOINT	P3 LOW FIRE SETPOINT	PX (X<24) HIGH FIRE SETPOINT
FUEL 1	1.5°	87.4°	20.6°	14.3°	74.6°
FUEL 2	1.8°	64.5°	10.5°	10.4°	50.3°
AIR DAMPER 1	2.1°	88.0°	3.5°	5.8°	80.9°
AIR DAMPER 2	1.1°	87.6°	40.7°	34.6°	56.6°
AIR DAMPER 3	1.9°	56.7°	23.2°	19.0°	32.2°
O2 LEVEL	N/A	N/A	N/A	5.3%	3.5%
AIR FLOW	N/A	N/A	N/A	25.3%	99.9%

Up to 24 setpoints may be entered for each profile, including close, purge, and ignition. New setpoints may be entered in commission ratio mode. Existing setpoints may be modified in adjust ratio mode or commission ratio mode.

Option Set Mode

Option set mode is used for changing the values of option parameters. If the burner is on, it may not be possible to adjust all of the option parameters.

Entering Option Set Mode

COMMISION RATIO MODE/ADJUST RATE MODE → COM → OPTION SET MODE

To enter option set mode, enter commission ratio mode or adjust ratio mode and press the key labeled **COM**.

Using Option Set Mode

- Use the LEFT/RIGHT scroll keys to point the select arrow at the option number on the top line of the display and use the UP/DOWN scroll keys to display the option parameter to be changed.
- Then use the LEFT/RIGHT scroll keys to point the select arrow at the option value then use the UP/DOWN keys to change the value of the option parameter.
- If the value has been changed, the value will flash. Press the key labeled COM (ENTER) to store the new value. It will then stop flashing.

Leaving Option Set Mode

OPTION SET MODE → FAULT MUTE → COMMISION RATIO MODE/ADJUST RATE MODE

To exit option set mode and return to commission ratio or adjust ratio mode, press the key labeled **FAULT MUTE** again.

OPTION SET MODE → DATA COM → COMMISION RATIO MODE/ADJUST RATE MODE

To exit option set mode and return to run mode, press the key labeled **DATA** and then **COM** (ENTER).

Commission Ratio Mode

Commission ratio mode is used for entering a new profile or changing an existing profile.

Using commission ratio mode, it is possible to step through each setpoint including close, purge and ignition. Once a setpoint has been entered, it is not possible to go back and modify it again in the same commissioning session. To do this, adjust ratio mode must be used after all the required setpoints have been entered.

Entering Commission Ratio Mode

RUN MODE, BURNER OFF → COM → ▼ ▲ → SUPPLIER PASSCODE → COM

To enter commission ratio mode, turn the burner off. Once the burner has completely shut down, press the key labeled **COM** and obtain the supplier passcode value using the **UP/DOWN** keys. Press the key labeled **COM** (ENTER).

If the entered pass code was correct, servomotor positions will be seen on display in addition to 'P0'. This represents the closed position setpoint.

Using Commission Ratio Mode

WARNING: Use extreme care while commissioning the system. While operating in commissioning mode the safety of the system is the sole responsibility of the commissioning engineer.

Incorrect positioning of either fuel or air could cause a hazardous situation to occur.

If the servo-motor positions have been up-loaded it is essential that the combustion is verified at each firing position to ensure a hazardous condition cannot occur, and for the data to be stored in the controller.

To adjust the position of a servomotor, use the left/right keys to point to the servomotor to be adjusted and then use the UP/DOWN keys to adjust its position. Depending on the profile selected, fuel 1 motor or fuel 2 motor may not be available.

Each setpoint in the profile is referred to with a letter and number (refer to the following chart).

No.	Name	Comments
P0	Close	This defines the positions the motors will move to when the burner is off, and must be set to the lowest position each motor can reach.
P1	Purge	This defines the positions the motor will move to when the burner is purging, and must be set to the highest position each motor can reach.
P2	Ignition	Position during ignition. May be outside the normal firing range.
P3	Low fire	Low fire setpoint.
Px	High fire	High fire setpoint, which is the last setpoint entered (max. P24)

The procedure for entering or modifying a profile is as follows:

1. Enter commission ratio mode. P0 (close) is displayed in the bottom right window.
2. If the close setpoint has been entered before and no change is required, press **AUTO MAN** (NEXT). Otherwise, move each motor to its lowest position and press **COM** (ENTER). P1 (purge) is displayed.

3. Select the burner and the required profile. The motors will automatically move to their highest positions and stop. If the purge setpoint has been entered before and no change is required, press **AUTO MAN** (NEXT). Otherwise, press **COM** (ENTER). P2 (ignition) is displayed.
4. Wait for the pre-purge time to elapse. If the ignition setpoint has been entered before, the drives will move to their ignition positions. If a change is required or the ignition setpoint has not been entered before, move all the motors being used to their required ignition positions and press **COM** (ENTER).
5. To attempt ignition of the burner, hold down the **AUTO MAN** (NEXT) key for approximately three seconds. If a change is required to the ignition position move all of the motors to their required positions and press **COM** (ENTER), if no change is required press AUTO MAN (NEXT).
6. Wait for the display to show P3 (low fire) after the relevant safety times have elapsed. If ignition is unsuccessful and a safety shutdown occurs, investigate the problem and repeat steps 2-5 to attempt ignition again.
7. If the low fire setpoint has been entered before and no change is required, press **AUTO MAN** (NEXT). Otherwise, move each motor to the required low fire position and press **COM** (ENTER). P4 (next profile setpoint above low fire) is displayed.
8. Repeat step 6 for each required profile setpoint, up to a minimum of P4 and a maximum of P23.
9. Leave commission ratio mode. The last profile setpoint entered will become the high fire setpoint.
10. If a controlled shutdown occurs, the unit will return to step 2. The set points entered in the current commissioning session are not lost and the **AUTO MAN** (NEXT) key may be used to step through the start-up sequence and fire the burner.
11. If a safety shutdown occurs, the set points are kept in the same way as for a controlled shutdown. It will be necessary to remove all faults before moving further than step 2.

Leaving Commission Ratio Mode

To leave commission ratio mode and return to run mode, press the key labeled **COM** (ENTER) for > 3 seconds then press the same key again to return to run mode.

- **If P2 (or higher) has been commissioned, the existing profile will be overwritten.** If you do not wish the existing profile to be overwritten, disconnect the power to the unit without returning to run mode
- **Only the set points used in the current commissioning session will be stored.** For example, if an existing profile has set points up to P15 but only the set points up to P10 were viewed or altered, then only the set points up to P10 will be stored. Therefore, it is vital that FAULT MUTE (NEXT) is pressed to get to the last setpoint in the profile before leaving commission ratio mode. This does not apply if only the close or purge set points (P0 or P1) are altered.

Adjust Ratio Mode

Adjust ratio mode is used only for changing an existing profile.

- Using adjust ratio mode, it is possible to modify the motor positions for any setpoint in the firing range from low to high fire (P3 and higher).
- It is also possible to view all set points (P0 and higher), even with the burner off.
- The set points may be chosen in any order.
- It is not possible to modify a motor position so that it is higher than the next setpoint or lower than the last setpoint.
- It is not possible to modify any motor position so that it is higher than the high fire setpoint.

- It is not possible to modify the close, purge or ignition positions (P0, P1 or P2 respectively). For this, commission ratio mode must be used.

Entering Adjust Ratio Mode

RUN MODE, BURNER ON → COM → ▼ ▲ → SUPPLIER PASSCODE → COM

To enter adjust ratio mode, turn the burner on. Once the burner begun its start up sequence, press the key labeled **COM** (ENTER) and obtain the supplier pass code value using the **UP/DOWN** keys. Once the correct pass code value has been obtained, press the key labeled **COM** (ENTER). Alternatively, the adjust ratio pass code may be used if the burner is on or off.

If the entered pass code was correct, 'A n' will be seen on the display in addition to the servomotor positions for the servos being used for the selected profile, where n is the number of the setpoint currently under adjustment.

Using Adjust Ratio Mode

WARNING: Use extreme care while commissioning the system. While operating in adjust ratio mode the safety of the system is the sole responsibility of the commissioning engineer.

Incorrect positioning of either fuel or air could cause a hazardous situation to occur.

- To adjust the position of a servomotor, use the **LEFT/RIGHT** scroll keys to point to the servomotor to be adjusted and then use the **UP/DOWN** keys to move the servomotor. Depending on the profile selected, some servomotors may not be available.
- To change the setpoint being modified, use the **LEFT/RIGHT** scroll keys to point to the profile point number 'An' and use the **UP/DOWN** keys to adjust the value.

Each setpoint in the profile is referred to with a letter and number.

No.	Name	Comments
A0	Close	The close setpoint cannot be altered in adjust ratio
A1	Purge	The purge setpoint cannot be altered in adjust ratio mode.
A2	Ignition	The ignition setpoint cannot be altered in adjust ratio mode.
A3	Low fire	The close setpoint cannot be altered in adjust ratio mode.
Ax	High fire	High fire setpoint, which was the last setpoint entered (max P24)

The procedure for modifying a setpoint is as follows:

1. Enter adjust ratio mode. 'A n' is displayed in addition to the servomotor positions, where n is the number of the setpoint which is closest to the current firing position.
2. Use the **LEFT/RIGHT** scroll keys to point to the profile point number 'An' to be adjusted and use the **UP/DOWN** keys to move to the setpoint in the firing range to be altered.
3. Wait for the 'A n' display to stop flashing and modify the fuel and air motors as required.
4. If the modified positions are not required, press the AUTO MAN (NEXT) key to return the motors to their original positions or use the scroll keys to select a different setpoint.
5. Press the **COM** (ENTER) key to store the new motor positions for the current setpoint.
6. Repeat steps 2-5 as required. Each time step 5 is completed, the new positions will be stored permanently.
7. Leave adjust ratio mode.

If the 'A n' display is flashing, it will not be possible to adjust the position of any of the motors. This may be for one of the following reasons:

- The burner is not firing. Switch the burner on and wait for the unit to begin modulating.
- The current setpoint is A0, A1 or A2. Use commission ratio mode to adjust these set points.
- The motors are moving to the required positions. Wait for the motors to stop moving.

Leaving Adjust Ratio Mode

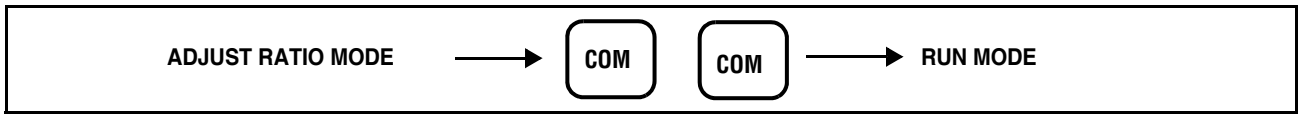

To leave adjust ratio mode and return to run mode, press the key labeled **COM** (ENTER) for > 3 seconds then press the same key again to return to run mode

Finding the Software Issue

There are two methods for finding the software issue:

1. From run mode, press the **COM** key. The software issue is shown on the display.
2. Use the engineer's key.

OXYGEN TRIM OPTION

WARNING: Use extreme care when handling the oxygen probe and wear heatproof gloves.

Ensure the burner is off before removing the oxygen probe from the flue.

If the boiler is to be operated with the probe removed, fit the blanking cover supplied since dangerous levels of carbon monoxide may be present in the flue.

Oxygen Probe

The oxygen trim / monitoring function is designed to be used with an NX2012 oxygen probe. This probe offers fast, accurate response and good reliability when mounted in accordance with the guidelines in this section.

The probe is available in three different sizes.

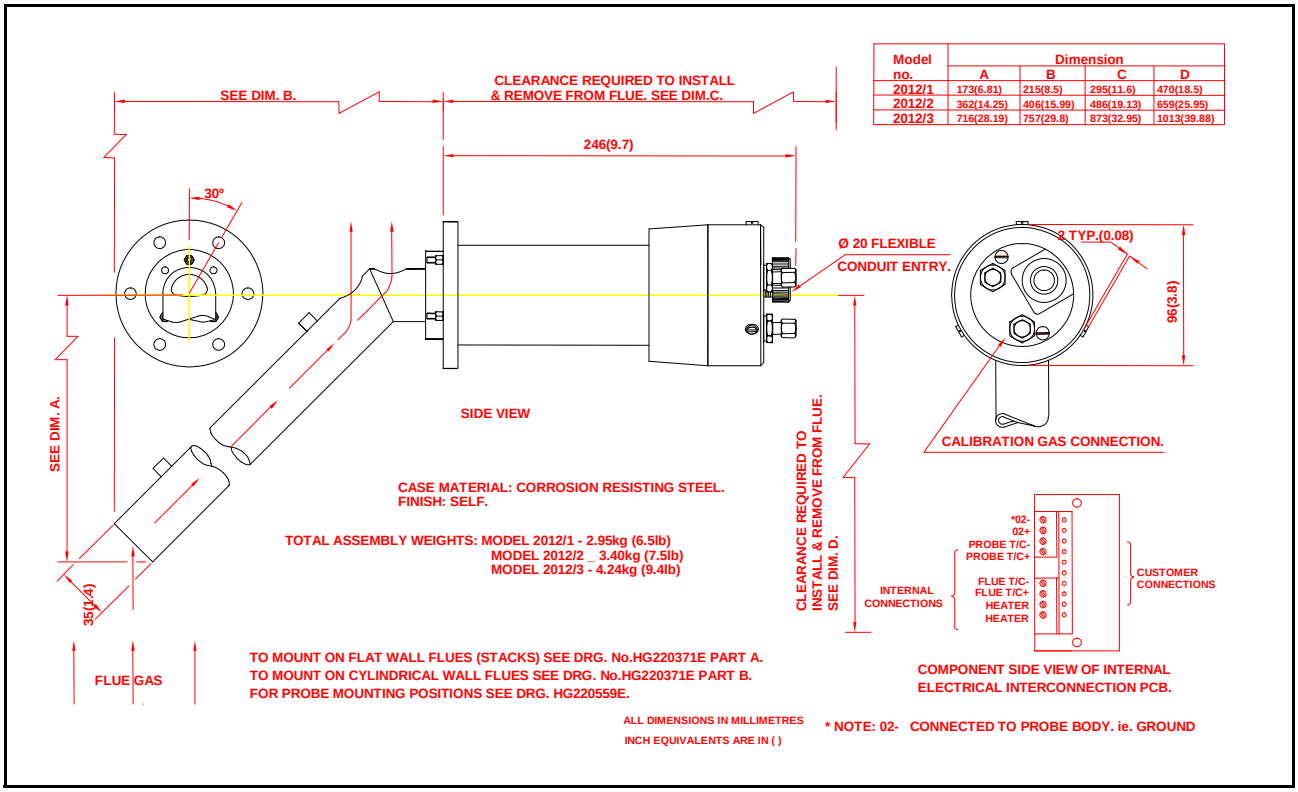

Model no.	Dimension			
	A	B	C	D
2012/1	173(6.81)	215(8.5)	295(11.6)	470(18.5)
2012/2	362(14.25)	406(15.99)	486(19.13)	659(25.95)
2012/3	716(28.19)	757(29.8)	873(32.95)	1013(39.88)

Installation of Oxygen Probe

Mounting the oxygen probe

The probe must be mounted in a manner which ensures that the flue gases pass into the gas tube at its open end and out of the tube at the flange end. Furthermore, if possible, the flange should be vertical with the gas tube angled downwards to ensure that particulates do not build up within the sample tube. Probe mounting with the flange horizontal is acceptable. Inverted probe mounting is not acceptable.

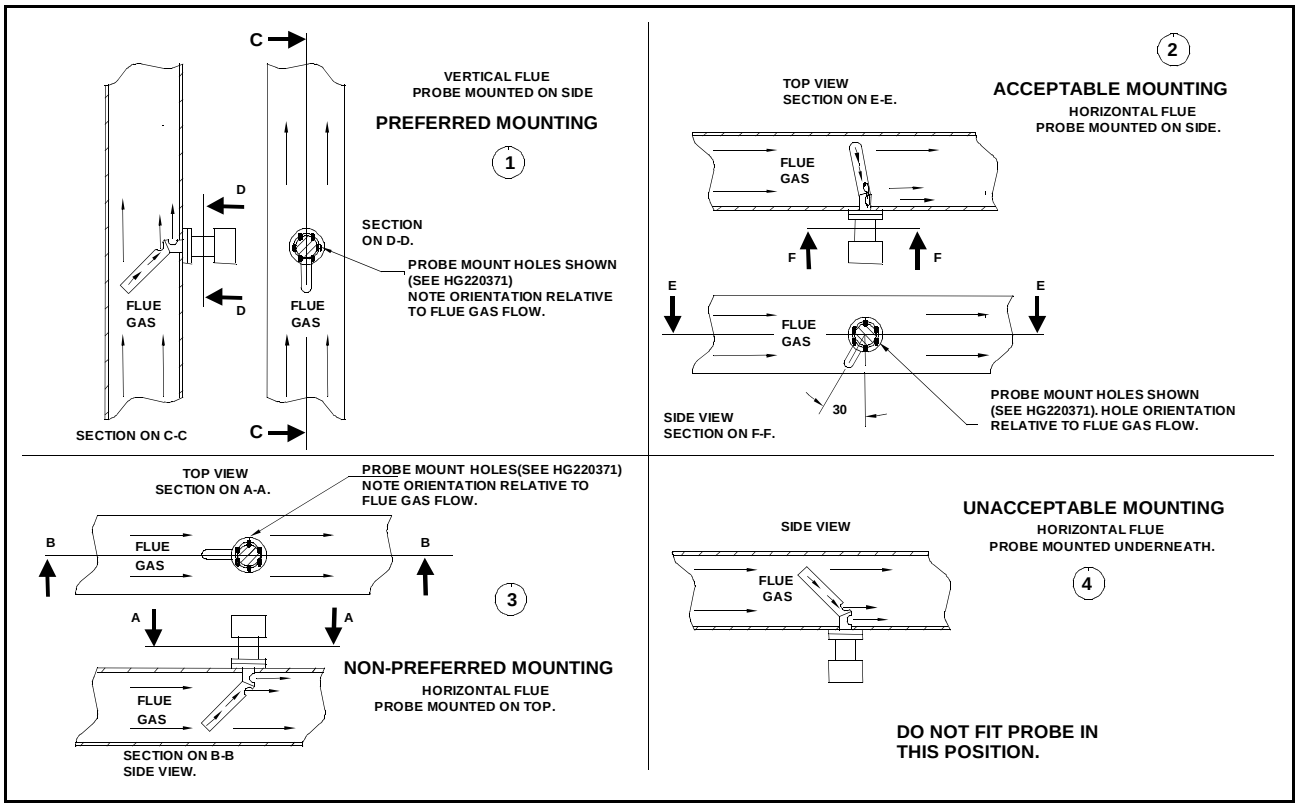

There are two types of flange available (see the drawing on next page). With either flange the vertical centre line of the flange shown on the drawing should correspond to the gas flow direction.

6 stainless steel M6 x 20mm socket cap screws are provided for probe attachment.

The probe flange temperature must be maintained at the temperature of the flue wall by repacking or adding lagging which may have been removed to mount the probe. Sulfate condensation will occur if the flue wall of an oil fired boiler falls below approximately 130°C. The sulfate problem does not occur in gas fired installations, but vapor may cause problems due to condensation if the temperature of the flue gas falls below 100°C.

The maximum flue gas temperature is 540ºC.

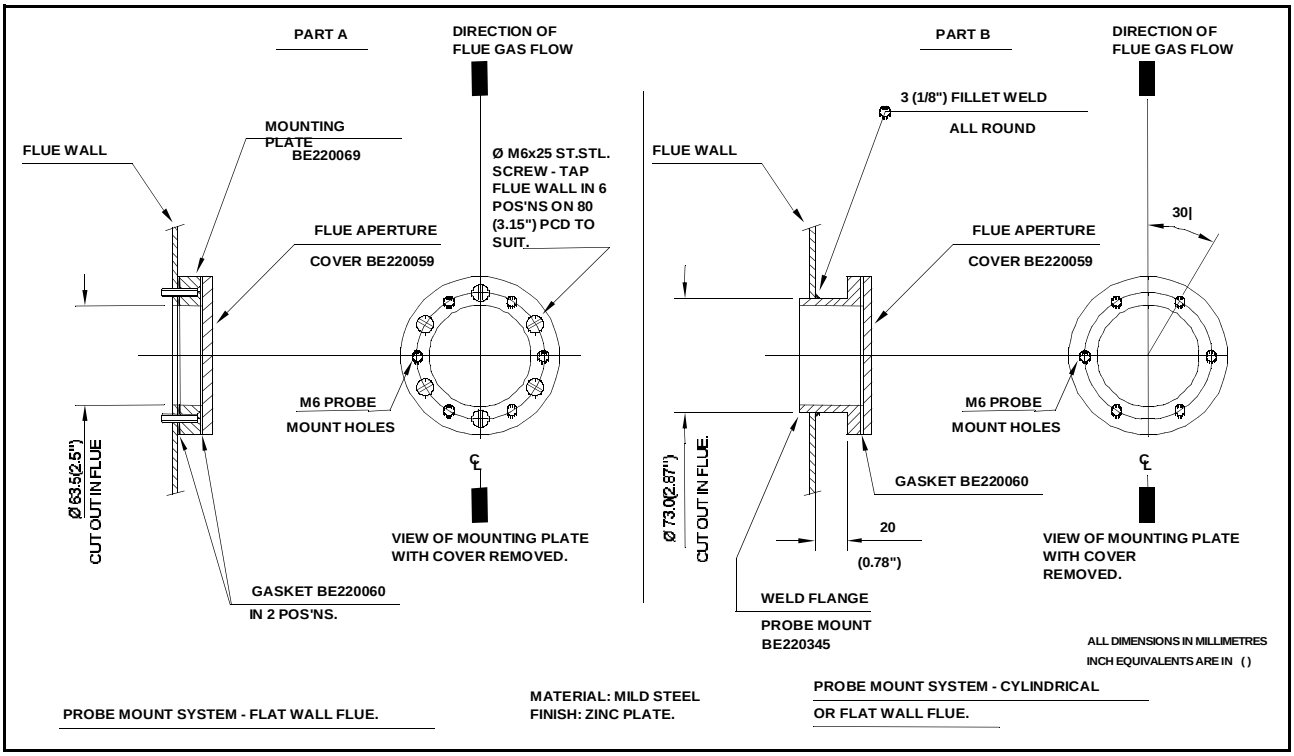

The probe end cap carries a removable flexible conduit fitting to enable probe replacement without wiring. The 2 hexagonal caps visible on the probe rear face are there to cover the calibration gas port and the sample gas port. The latter is merely a tube which passes directly into the flue to enable gas samples to be drawn or flue temperatures to be taken using other instrumentation. Both ports must be kept sealed during normal operation for safety and accurate performance.

WIRING

WARNING: Disconnect the power supply before beginning installation to prevent electrical shock, equipment and/or control damage. More than one power disconnect may be involved.

Wiring must comply will all applicable codes, ordinances and regulations.

Wiring where required, must comply with NEC Class 1 (Line Voltage) wiring.

Both the Nexus and PPC5000 systems are designed to interface to the Fireye oxygen probe, which allows the unit to monitor to flue oxygen and temperature and if required to provide full closed loop oxygen trim control.

The cabling between the unit and the probe consists of the following:-

Cable	Specification
Probe Heater Cable	**Max. voltage in use <30V ac** Overall braid shielded 2-conductor PVC insulated 18AWG – 16/30AWG (300V 80°C). Max. cable length 20 meters between units.
Probe Cell Signal Cable	• **Max. voltage in use < 15V dc** • Overall braid shielded 2-conductor PVC insulated 24AWG – 7/32AWG (300V 80°C). • Max. cable length 20 meters between units.
Heater and Flue Thermocouple Compensation Cable	• **Max. voltage in use <15V dc** • 2 PVC insulated cores blue and white covered by a red PVC sheath. • Each conductor consists of 24AWG – 7/32AWG (300V 80°C) stranded conductors covered by PVC insulation. • Type K compensating cable
Probe Transformer Secondary Cable	• **Max. voltage in use <30V ac** • Single core stranded conductor 18AWG 16/30 (300V 80°C) • O.D. 2.0mm

The supply for the oxygen probe heater must be provided by the user and fused before connection to the unit with a 3A anti-surge fuse, a suitable fuse should also be fitted into the supply to the transformer to protect it.

When mounting the oxygen probe heater transformer in the panel, provision must be made to fuse the transformer's secondary and primary windings. The fuse ratings are:

Primary	1.25A (T)	anti-surge
Secondary	3A (T)	anti-surge

Oxygen Probe to Controller Connection Detail

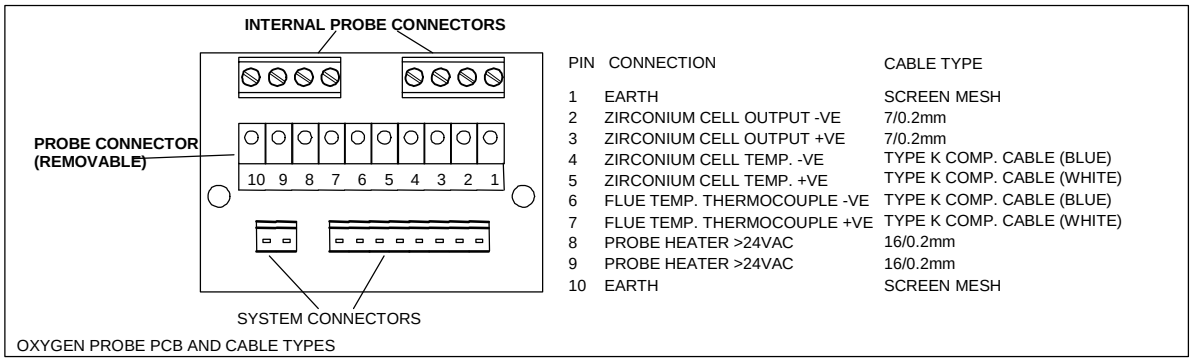

PIN	CONNECTION	CABLE TYPE
1	EARTH	SCREEN MESH
2	ZIRCONIUM CELL OUTPUT -VE	7/0.2mm
3	ZIRCONIUM CELL OUTPUT +VE	7/0.2mm
4	ZIRCONIUM CELL TEMP. -VE	TYPE K COMP. CABLE (BLUE)
5	ZIRCONIUM CELL TEMP. +VE	TYPE K COMP. CABLE (WHITE)
6	FLUE TEMP. THERMOCOUPLE -VE	TYPE K COMP. CABLE (BLUE)
7	FLUE TEMP. THERMOCOUPLE +VE	TYPE K COMP. CABLE (WHITE)
8	PROBE HEATER >24VAC	16/0.2mm
9	PROBE HEATER >24VAC	16/0.2mm
10	EARTH	SCREEN MESH

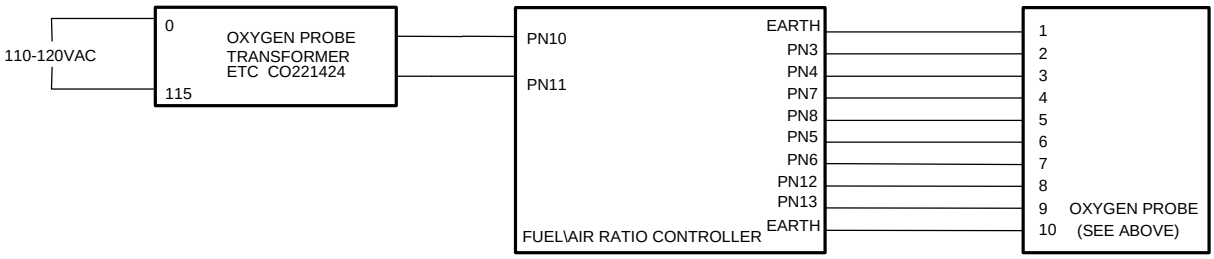

Before applying power to the unit ensure that the probe heater output is not attempting to drive into a short circuit by checking between terminals PN12 and PN13 using a resistance meter. The expected resistance with an oxygen probe fitted should be greater than 15 ohms.

Note that there are no connections to terminals PN14 and PN15 for the software version described in this manual.

After ensuring all connectors are correctly fitted, secure the insulating terminal cover to the unit.

Inlet Temperature Sensor

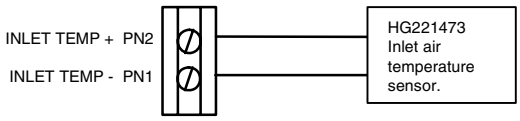

The Nexus PPC5000 system allows direct connection of an Fireye 3035 inlet temperature sensor. This is provided with the zirconium probe kit itself. The cabling between the units is via an overall shielded 2 conductor 22AWG-7/30, 300V 80°C (7/0.2mm) PVC insulated cable. Wiring must comply with all applicable codes, ordinances and regulations and where required, must comply with NEC Class 1 (Line Voltage) wiring.

Interface to Auxiliary Equipment

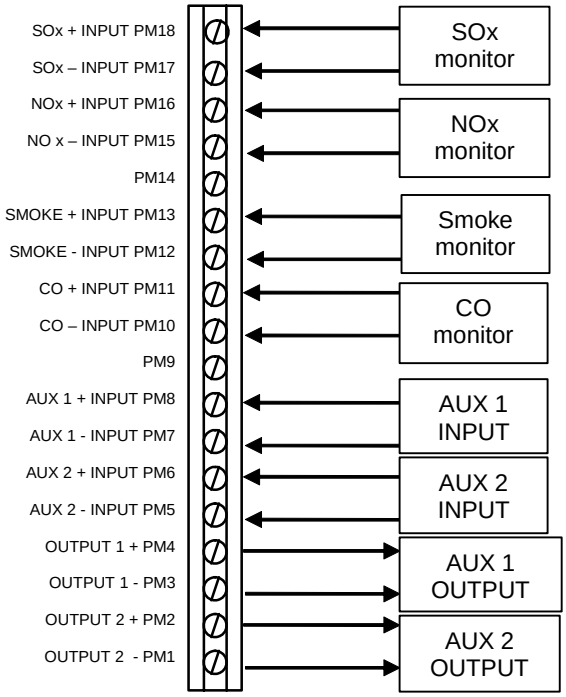

The interface cabling, to either flue gas analyzers or systems connected to the 4-20mA outputs, must be overall braid screened 2-core PVC insulated 24AWG – 7/32AWG (300V 80°C), for all signals. Wiring must comply with all applicable codes, ordinances and regulations and where required must comply with NEC Class 1 (Line Voltage) wiring. Terminate the screen **at the unit only** using the cable clamp provided.

If this cable is run in conduit with other cables its specification may need to be increased to ensure its voltage rating exceeds the maximum voltage carried by any other cable in the same conduit.

CALIBRATING AND SERVICING THE OXYGEN PROBE

Calibration

WARNING: Before proceeding with probe calibration, ensure you have a suitable air and reference gas supply, since both are required to complete the calibration procedure.

The calibration gas concentration must be entered as option parameter 30.3 and the oxygen trim function must be disabled using option parameter 30.5.

The probe calibration must be executed in sequence or the calibration will be invalid.

Proceed with probe calibration as follows:

1. Enter option set mode using the site passcode.
2. Change the current option parameter to 30.6. The bottom right display will show the status of calibration.
3. With the bottom right display showing 0 the system is not in calibrate mode.
4. Change the bottom right display to 1 and then enter. The oxygen trim function will be disabled and the system is in calibrate air mode.
5. Apply the calibration air supply to the oxygen probe calibration port. Once this has been connected, exit to RUN mode and select the oxygen display. This enables the probe offset to be viewed. Allow this value to settle and then re-enter option set mode.
6. Ensure option 30.6 is still being displayed and increment the bottom right display to 2 and then enter. The oxygen trim function will remain disabled and the system will be in calibrate reference gas mode.
7. Apply the calibration gas to the oxygen probe calibration port, ensuring that its value is as entered into the option parameter 30.3 (oxygen probe calibration gas concentration).
8. Once this gas has been connected exit to RUN mode and select the oxygen display. This enables the probe gain to be viewed. Allow this to settle and re-enter option set mode.
9. Ensure option 30.6 is still being displayed and change the bottom right display to 0 and then enter. The new calibration values will now be used for the oxygen probe, and can be viewed via parameters 30.1 and 30.2.
10. Before enabling the oxygen trim function using option parameter 30.5, ensure that the calibration gas supply is removed from the probe and that the probe calibration port end cap is fitted, to prevent incorrect operation.

Oxygen Probe Filter Testing

The filter can be tested without removing the probe from the flue. Before proceeding, ensure the oxygen trim function is disabled using option parameter 30.5.

The check is carried out by passing air at 350cc/min (22cu. ins/min) into the calibration gas connection on the rear of the probe adjacent to the flexible conduit fitting, and checking the pressure drop.

The pressure drop can be found by connecting a manometer or similar in the flow line to the calibration gas connection, as shown below.

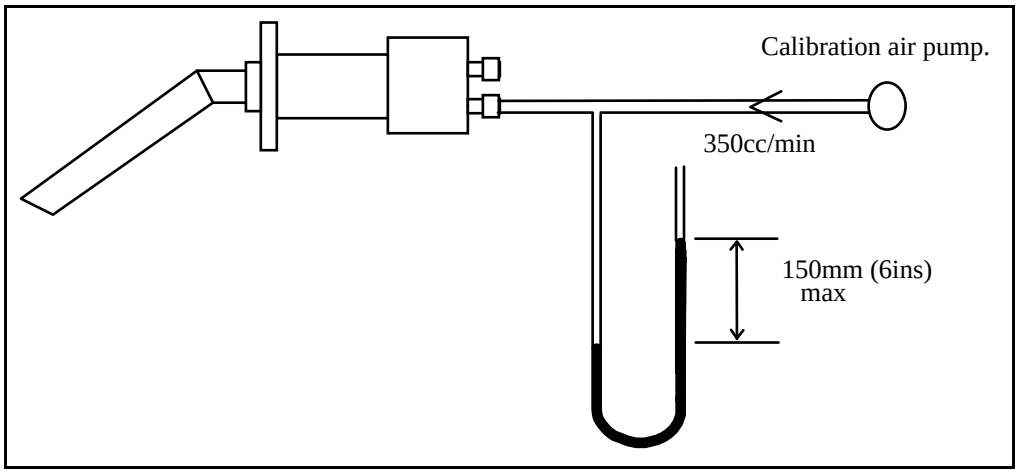

If the pressure is 150mm (6ins) water gauge or more the filter must be replaced.

Removing the Oxygen Probe from the Flue

WARNING: Before attempting to remove the probe, switch off the system and the boiler. It is essential to switch the burner off since dangerous levels of carbon monoxide may be present in the flue.

Since the body of the probe will be hot, it will be necessary to use heat resistant gloves to hold the probe.

Do not operate the boiler without the probe or blanking plate fitted since dangerous levels of carbon monoxide may be present in the flue.

The Fireye Oxygen Probe Type NX2012 is retained in the flue by six 6mm stainless steel socket head cap screws.

- Loosen the 3 screws securing the probe end cap and slide the cap down the flexible conduit. Take care, since the end cap may be hot.
- Access is now available to the electrical terminations. Remove the plug from the printed circuit board allowing the flexible conduit fitting to slide out of the probe body complete with the plug.

Since the body of the probe will be hot, it will be necessary to use heat resistant gloves to hold the probe.

- Remove the six retaining screws. The probe can be extracted from the flue taking care not to damage the sealing gasket.
- The only customer replaceable items are the flue thermocouple and oxygen filter.
- If it is necessary to operate the boiler while the probe is removed, the blanking plate supplied with the equipment must be fitted to the probe flange.
- Refitting is the reverse of the removal procedure. Ensure that the screws are tightened sequentially.

Filter Replacement

- Remove the oxygen probe from the flue as detailed in section 6.4.3, and unscrew the insulating flue thermocouple mounting blocks from the snout.
- Before removing the three 6mm stainless steel nuts and spring washers which retain the snout, it is important to hold the body horizontal or snout down to prevent soot or other deposits from falling into the probe body.
- When the 3 nuts and washers have been removed, the snout can be drawn off the mounting studs to allow the captive filter assembly to be removed.

- The new filter assembly (part number LA220623) can then be inserted into the snout, beveled side inwards.
- The snout can be refitted, ensuring that the filter locates into the probe body. The retaining washers and nuts should be tightened sequentially to seal the filter assembly to the flange.

Probe Mounted Flue Thermocouple Replacement

- Remove the oxygen probe from the flue as detailed in section 6.4.3.
- Disconnect the internal connections to the thermocouple.
- Unscrew the 2 thermocouple-mounting blocks from the probe snout to allow the thermocouple to be straightened.
- Remove the hexagonal nut securing the thermocouple into the probe and withdraw the thermocouple through the probe body.
- Refitting is the reverse of the removal procedure. The electrical connection and polarity of the thermocouple are detailed below.

SOx, NOx, Smoke, CO, AUX1, AUX2, O/P1, O/P2

The 6 inputs are isolated from the 2 outputs and the oxygen probe, however, they are not isolated from each other.

The 2 outputs are isolated from the 6 inputs and the oxygen probe, however, they are not isolated from each other.

Oxygen Trim Operation

With the oxygen trim system correctly commissioned and enabled, the unit will continually compensate for changes in fuel and environment that affect combustion.

The trim system will continually monitor the flue oxygen level and attempt to maintain this as close the desired oxygen level (oxygen setpoint) for the current point in the firing range.

Using air or fuel flow information entered into the unit at commission time, the trim drive motor will be moved by an amount which will give the desired change in air or fuel flow, which then gives the desired flue oxygen reading.

The adaptive algorithm used will then remember how much trim was applied at this point and next time this firing point is reached, the same trim will be applied immediately without having to wait for the oxygen value to change.

Trim is not applied if the unit is in commission mode.

Commissioning Oxygen Trim

WARNING: Use extreme care when entering flow values and oxygen set points. Incorrect setting of either could cause a hazardous situation to occur.

If the flow values and oxygen set points have been up-loaded it is essential that the combustion is verified at each firing position to ensure a hazardous condition cannot occur.

If using automatic oxygen trim commissioning it is the sole responsibility of the commissioning engineer to ensure the values calculated by the system are correct and will not cause a hazardous condition to occur.

Once the oxygen trim is commissioned the trim flow limit must be set to ensure a fault in the oxygen trim will not cause a hazardous condition to occur.

For the oxygen trim system to function correctly, the following information must be entered:

1. Option parameters
2. Flow values and O2 setpoints.

These values may be entered manually by the engineer, or the system can automatically calculate the values and enter them itself (automatic trim commissioning).

If the automatic trim commissioning is performed, the engineer **MUST CHECK THAT THE VALUES ENTERED ARE VALID AND SAFE AFTER COMPLETION.** Additionally, the oxygen probe calibration should be checked before and after the procedure since the results are highly dependent on measurements taken using the probe.

Entering the Option Parameters

With the burner off, enter commission mode. To get the trim operational it is only necessary to set up the following option parameters:

1. Trim drive – The drive moved in order to achieve trim (options 32.X)
2. Trim limits – To impose limits on the amount of trim applied (options 33.X)
3. Trim enable – To turn trim on (option 35.5)

Before proceeding to enter the oxygen setpoints for each profile, a few points relating to the oxygen trim option should be considered.

- The drives being trimmed **must not** be selected as **lead drive**.
- No trim is applied which would require a drive to move above its high fire position or below its low fire position.
- The flow for each profile position must be entered to ensure correct operation. The flow can either be measured for each profile position or calculated as a percentage with respect to the flow at high fire.

Using Adjust Ratio Mode to Enter Oxygen Setpoints and Flow Values Manually

When using the adjust ratio mode, it is not possible for the unit to check drive positions at all times. It is the responsibility of the engineer to check that motors and valves are responding correctly.

To adjust an oxygen setpoint or enter an air flow value in the firing range, use the following procedure. The manual calculation of the values to be entered here is covered in the next section.

1. Enter adjust ratio mode.

2. Ensure oxygen trim or monitoring is selected by option parameter 30.0 (1 or 2).

3. Use the scroll keys to select the desired setpoint and move up and/or down (A4 for example). The system will modulate to the selected setpoint and the number displayed will flash to indicate that the drives are modulating.

4. Wait for the number in the display to be illuminated steadily. This means that the drives have arrived at the selected setpoint.

5. The display will allow scrolling sideways to show flow and "o2" in addition to the servo-motor positions to indicate that the system is expecting a flow value and an oxygen setpoint to be entered for the current profile setpoint. To check the current oxygen measured value use the engineer's key facility.

6. Once the oxygen value is shown on the display use the scroll keys to position the '>' pointing to the 'o2' value use the UP/DOWN keys to adjust the oxygen setpoint as necessary. The display will start flashing to indicate that a change has been made.

7. If the new oxygen setpoint value is wanted, press the ENTER key. The value will be stored in memory.

8. If the new oxygen setpoint value is not wanted or an adjustment is not required, press the NEXT key to return to the value stored in memory.

9. Once the flow value is shown on the display use the scroll keys to position the '>' pointing to the 'FLO' value use the UP/DOWN keys to adjust the flow value as necessary. The display will show the air flow value, represented as a percentage of the air flow when the drives are at the HIGH FIRE position. The display will start flashing to indicate that a change has been made.

10. If the new flow value is not wanted or an adjustment is not required, press the NEXT key to return to the value stored in memory.

11. If it is necessary to adjust another setpoint in the firing range, repeat the above procedure from step 3.

Calculating and Entering the Flow Values Manually

If the flow values are to be calculated manually, the procedure listed below must be followed.

Enter Adjust Ratio Mode with oxygen trim disabled as outlined above.

1. Select the high fire position. This will cause the display to show A(n), where n is the number of the high fire profile point.
2. Wait until the oxygen reading has stabilized, the value can be viewed using the engineer's key.
3. Record the **excess air** value at location x in the table. For single fuel profiles, this value may be found using the Engineer's Key parameter EK88 (provided the hydrocarbon ratio has been entered into the appropriate option parameter (36.4 - 36.6) for this fuel). For multiple fuel profiles, the tables in section 0 will aid an estimate to be made, using the current oxygen reading.
4. Select the profile position immediately below high fire. This will cause the display to show A(n -1).
5. Wait until the oxygen reading has stabilized and record the **excess air** value at location a1 in the table
6. Move air dampers 1 and 2 (if fitted) up until they stop, so that they are at the setpoint immediately above the current position. **Do not press enter.**
7. Wait until the oxygen reading has stabilized, then record the **excess air** value at location b1 in the table, relating to the current profile position
8. Repeat the above for all other profile positions including low fire (profile position A3), recording each time the values at locations a and b in the table. When extra air is added at P3, the time taken before the flue oxygen reading starts to increase should be measured and entered into option parameter 30.7.
9. After completing the table for all Excess Air values a and b, complete the Excess Air + 100 column, by adding 100 (i.e. y = x + 100, c = a + 100 and d = b + 100.
10. Complete the Ratio column by dividing c by d (i.e. e = c/d).
11. Complete the Airflow column by multiplying e by the previous value of f (i.e. $f_x = ex\ f_x$-1).
12. If the system will be applying trim to the fuel, the fuel flow column must be completed. This is achieved by multiplying the airflow at each point by the ratio of excess air + 100 at high fire divided by the excess air + 100 at the actual point (i.e. $gx = f_x(y/c_x)$).

Example of table completed for A10 (high fire) to A8. In practice, the table must be filled out down to A3 (low fire).

Profile Position	Excess Air		Ex. Air + 100 y = x + 100 c = a + 100 d =b + 100		Ratio	Airflow	Fuelflow
High fire = A10	x	10	y	110		99.9%	99.9%
1 = A9	a_1 b_1	8 33	c_1 d_1	108 133	$e_1 + c_1/d_1$ 0.812	$f_1 = e_1$ (99.9) 81.1%	$g_1 = f_1$ (y/c_1) 82.6%
2 = A8	a_2 b_2	9 20	c_2 d_2	109 120	$e_2 + c_2/d_2$ 0.908	$f_2 = e_2$ (f_1) 73.7%	$g_2 = f_2$ (y/c_2) 74.4%

Table 1: Flow calculation table

Profile Position	Excess Air		Ex. Air + 100 y = x + 100 c = a + 100 d =b + 100		Ratio	Airflow	Fuelflow
High fire = A	x		y				
1 = A	a_1 b_1		c_1 d_1		$e_1 + c_1/d_1$	$f_1 = e_1 (99.9)$	$g_1 = f_1 (y/c_1)$
2 = A	a_2 b_2		c_2 d_2		$e_2 + c_2/d_2$	$f_2 = e_2 (f_1)$	$g_2 = f_2 (y/c_2)$
3 = A	a_3 b_3		c_3 d_3		$e_3 + c_3/d_3$	$f_3 = e_3 (f_2)$	$g_3 = f_3 (y/c_23)$
4 = A	a_4 b_4		c_4 d_4		$e_4 + c_4/d_4$	$f_4 = e_4 (f_3)$	$g_4 = f_4 (y/c_4)$
5 = A	a_5 b_5		c_5 d_5		$e_5 + c_5/d_5$	$f_5 = e_5 (f_4)$	$g_5 = f_5 (y/c_5)$
6 = A	a_6 b_6		c_6 d_6		$e_6 + c_6/d_6$	$f_6 = e_6 (f_5)$	$g_6 = f_6 (y/c_6)$
7 = A	a_7 b_7		c_7 d_7		$e_7 + c_7/d_7$	$f_7 = e_7 (f_6)$	$g_7 = f_7 (y/c_7)$
8 = A	a_8 b_8		c_8 d_8		$e_8 + c_8/d_8$	$f_8 = e_8 (f_7)$	$g_8 = f_8 (y/c_8)$
9 = A	a_9 b_9		c_9 d_9		$e_9 + c_9/d_9$	$f_9 = e_9 (f_8)$	$g_9 = f_9 (y/c_9)$
10 = A	a_{10} b_{10}		c_{10} d_{10}		$e_{10} + c_{10}/d_{10}$	$f_{10} = e_{10} (f_9)$	$g_{10} = f_{10} (y/c_{10})$
11 = A	a_{11} b_{11}		c_{11} d_{11}		$e_{11} + c_{11}/d_{11}$	$f_{11} = e_{11} (f_{10})$	$g_{11} = f_{11}(y/c_{11})$
12 = A	a_{12} b_{12}		c_{12} d_{12}		$e_{12} + c_{12}/d_{12}$	$f_{12} = e_{12} (f_{11})$	$g_{12} = f_{12} (y/c_{12})$
13 = A	a_{13} b_{13}		c_{13} d_{13}		$e_{13} + c_{13}/d_{13}$	$f_{13} = e_{13} (f_{12})$	$g_{13} = f_{13} (y/c_{13})$
14 = A	a_{14} b_{14}		c_{14} d_{14}		$e_{14} + c_{14}/d_{14}$	$f_{14}= e_{14} (f_{13})$	$g_{14} = f_{14} (y/c_{14})$
15 = A	a_{15} b_{15}		c_{15} d_{15}		$e_{15} + c_{15}/d_{15}$	$f_{15} = e_{15} (f_{14})$	$g_{15} = f_{15} (y/c_{15})$
16 = A	a_{16} b_{16}		c_{16} d_{16}		$e_{16} + c_{16}/d_{16}$	$f_{16}= e_{16} (f_{15})$	$g_{16} = f_{16} (y/c_{16})$
17 = A	a_{17} b_{17}		c_{17} d_{17}		$e_{17} + c_{17}/d_{17}$	$f_{17} = e_{17} (f_{16})$	$g_{17} = f_{17} (y/c_{17})$
18 = A	a_{18} b_{18}		c_{18} d_{18}		$e_{18} + c_{18}/d_{18}$	$f_{18} = e_{18} (f_{17})$	$g_{18} = f_{18} (y/c_{18})$
19 = A	a_{19} b_{19}		c_{19} d_{19}		$e_{19} + c_{19}/d_{19}$	$f_{19} = e_{19} (f_{18})$	$g_{19} = f_{19} (y/c_{19})$
20 = A	a_{20} b_{20}		c_{20} d_{20}		$e_{20} + c_{20}/d_{20}$	$f_{20} = e_{20} (f_{19})$	$g_{20} = f_{20} (y/c_{20})$

Automatic trim commissioning

The unit is able to automate the above procedures, automatically calculating and entering flow values, oxygen trim setpoints, and boiler transport delay. The automatic commissioning procedure will only work if the following conditions are met:

- Option parameter 30.9 (automatic trim commissioning) is set to 1
- An oxygen probe is fitted and fully operational
- The unit is in adjust ratio with the burner firing a single fuel only
- A hydrocarbon ratio has been entered for the current fuel (see option parameters 36.4 – 36.6).

The auto commissioning procedure will usually take between 10 and 30 minutes (depending on number of setpoints), and is performed by the unit as follows:

1. Beginning with high fire, the unit moves the drives to each point in the firing range. The display will show 'Flow calc An'.
2. When the measured oxygen reading settles, the unit stores the measured oxygen reading as the new oxygen setpoint.
3. The unit moves the air drives up to the point above the current setpoint, leaving the fuel drive in the same position. The display will show 'Flow calc An + 1'.When the new oxygen reading settles, the unit calculates and stores the new flow value. If the oxygen reading exceeds 15.0% during this stage, the unit shuts the burner down with F77.
4. When the unit has completed the low fire point, the measured boiler transport delay (at low fire) is stored in option parameter 30.7. Option parameter 30.5 (oxygen trim enable) is set to zero.

WARNING: Before enabling trim, use Adjust Ratio Mode to manually check the calculated flow values, oxygen setpoints and transport delay. The low fire percentage flow value should conform approximately to the turn-down ratio of the burner.

To perform automatic trim commissioning, follow the procedure below:

1. Calibrate the oxygen probe.
2. Enter adjust ratio mode.
3. Enable automatic trim commissioning by setting option parameter 30.9 to 1.
4. Wait for procedure to finish.
5. Re-calibrate the oxygen probe.
6. Check that the O_2, flow and transport delay values are sensible.

Troubleshooting

PROBLEM	POSSIBLE CAUSE	SUGGESTED ACTION
Oxygen display not available.	No FMI board installed in option slot 2. Probe calibration values not entered | correctly. Probe installed incorrectly.	Check for board installed. Re-enter values (options 30.1, 30.2, 30.6). Check wiring.
No inlet temperature display.	No FMI board installed in option slot 2. Option 36.0 has not been set.	Check for board installed. Set to 1 or 2.
Inlet or flue temperature display flashes “Hi”	No FMI board installed in option slot 2. Option 36.0 has not been set.	Check for board installed. Set to 1 or 2.
Inlet or flue temperature display flashes "Hi"	Inlet air temperature sensor / O2 probe not installed and wired correctly.	Check wiring to connector PN.
No efficiency display or efficiency incorrect.	No oxygen display. No inlet temperature display. The burner is firing a multiple fuel combination? No calorific value for the current fuel been entered into 36.X? Have flow values been entered for the current fuel combination?	See ‘No oxygen display’ See ‘No inlet temperature display’ Efficiency cannot be calculated for multiple fuel combinations. Enter the value for the fuel in use. Enter the flow values.
Oxygen display shows ‘---‘	Burner off. Transport delay not expired. Probe not heated up yet.	Not a fault. Not a fault. Check EK85 – must be above 600ºC to work.
Oxygen trim will not work	Trim is not operative. Boiler just fired up. Probe calibration values not entered correctly. Probe not heated up yet. Probe installed incorrectly. Set to monitor only. Probe in calibration. Trim being reset. Trim drive same as lead drive. Trim limits set to 0.0% of flow. Trim integral gain set to zero. Commissioning data missing.	Use EK25 to decide if trim is operative. If trim is not operative, use EK53 to find out why. Check that option 30.0 =1 or 2. Wait for the boiler transport time (after ignition). Wait for modulation. Re enter values (options 30.1,30.2,30.6) Check EK85 – must be above 600ºC to work. Check wiring. Check option parameter 30.5 set to 1. Check option parameter 30.6 set to 0. Check option parameter 30.8 set to 0. Check option parameters 7.X and 32.X are different. Check option parameters 33.X. Check option parameters 34.X are non zero. Check oxygen and flow values been entered for all profile points in the firing range.

Excess air graphs

Relationship between flue gases - North sea gas.

Notes: 1. ETC systems display Oxygen (Wet), Carbon dioxide (Dry).
2. North sea gas R=0.32

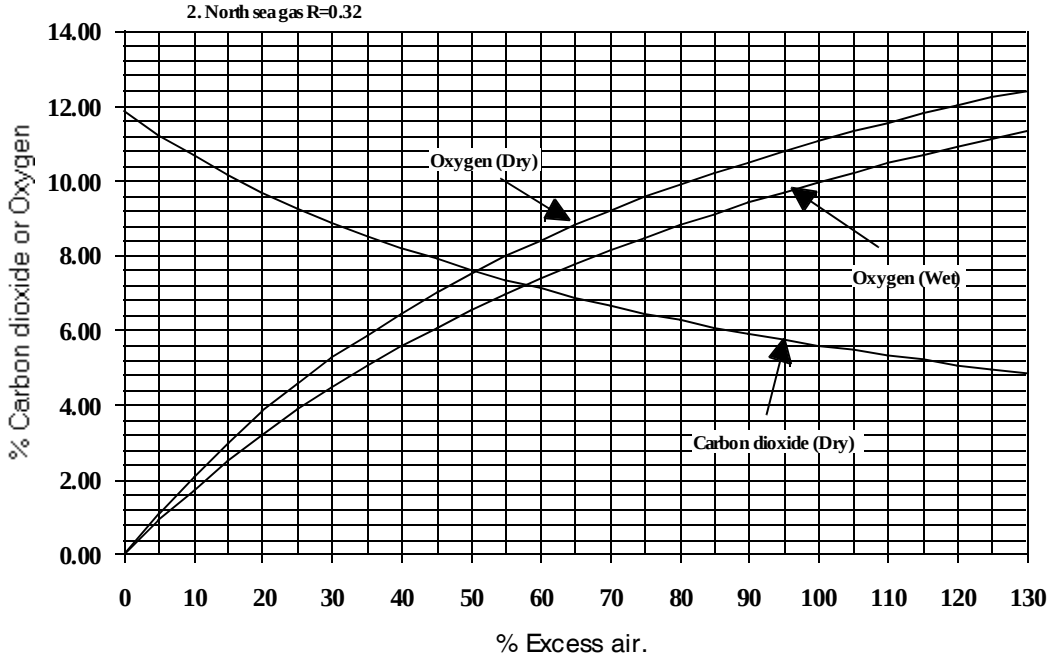

Relationship between flue gases - Heavy Fuel Oil

Notes: 1. ETC systems display Oxygen 'wet', Carbon dioxide 'dry'.
2. Heavy fuel oil (85cSt/3500Sec), R=0.128

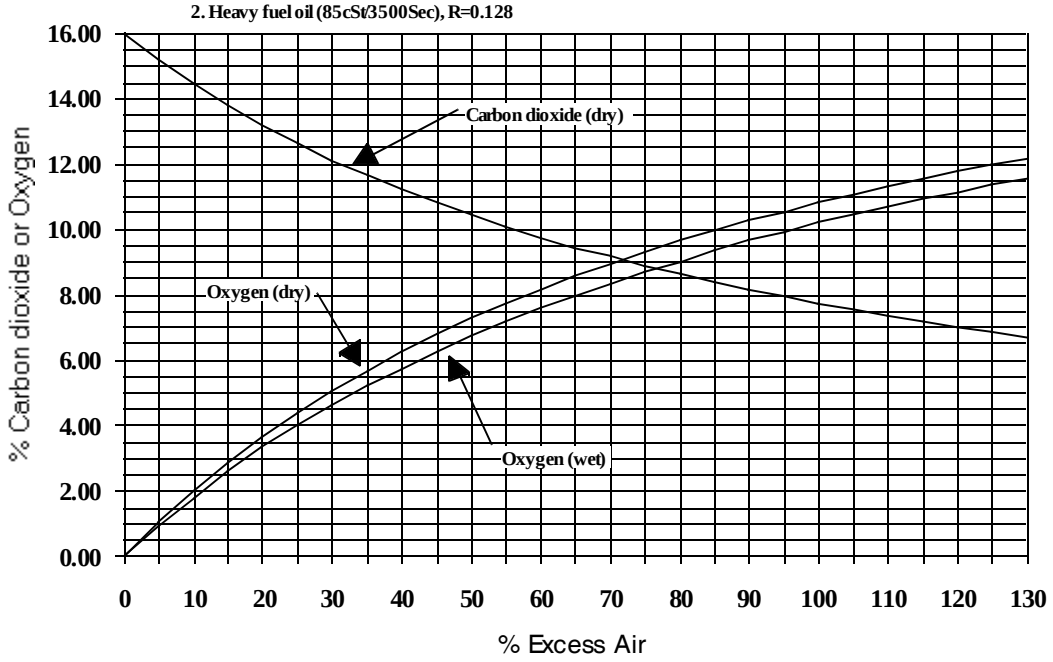

Inverter (variable speed) drives

WARNING: If an inverter is connected to the Nexus PPC5000 fuel air ratio control system it must be listed or component recognized by authorities who have jurisdiction for the specific purpose for which it is being used.

Wiring must comply with all applicable codes, ordinances and regulations.

Wiring, where required, must comply with NEC Class 1 (Line Voltage) wiring.

System configuration

The Nexus PPC5000 fuel air ratio control system uses a 4-20mA output on the IDB (isolated drive board), AH221244 as a speed reference signal to the inverter. A matching 4-20mA input is used to monitor a feedback signal from the inverter, representing the speed of the motor.

In addition to the 4-20mA signals, the inverter also requires a motor start signal that must be taken from the burner controller. The 'motor start' signal must occur at the same time as the HI/LO INITIATE (PC11) signal to the Nexus PPC5000 fuel air ratio control system for reliable operation. The fault relay of the inverter must be connected into the stat circuit of the burner, so that if the relay breaks the inverter will be shut down.

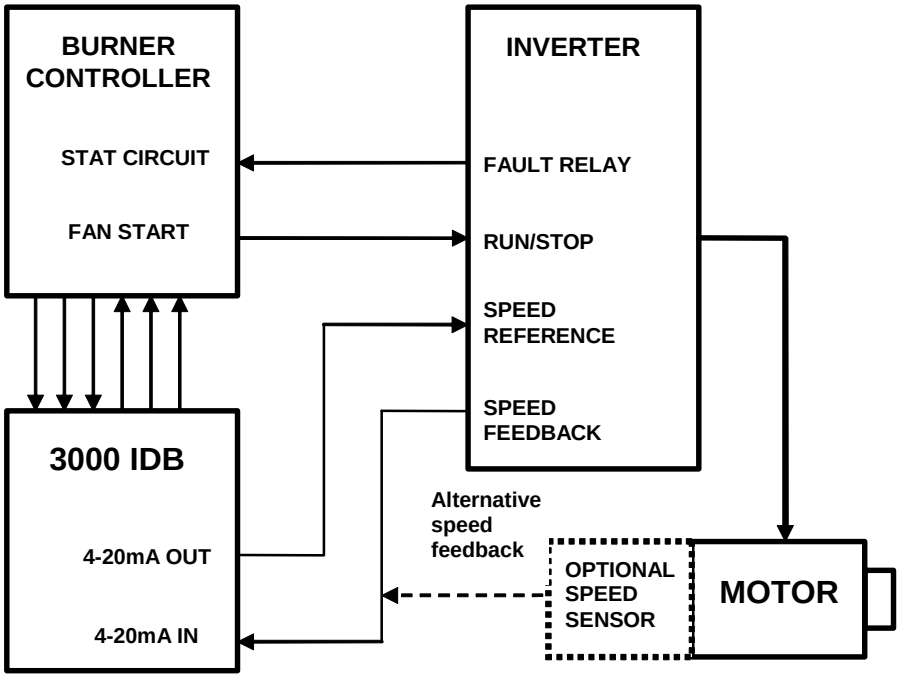

Since there are two input/output pairs on each IDB and up to two IDB's may be fitted in the option slots, a maximum of four inverters may be controlled from one unit.

Description of control method

During start up of the burner and before the drives move to purge, the Nexus PPC5000 fuel air ratio control system moves all motors to their minimum positions and outputs a current of 4mA to each inverter drive. The unit waits for the inverter stop time (option 22.4), and then monitors the feedback signals of all drives and compares them to the values which were stored in memory at commission time. If the values do not match the ones in memory, a positioning fault is given and the unit performs a safety shutdown.

If the test is successful, the unit moves all motors to their maximum positions and outputs a current of 20mA to each inverter drive. As the drives' feedback signals increase, the response time of each drive is measured for later use in the control algorithm during modulation. Once the drives' feedback signals have stopped changing, the unit again performs a comparison with the values that were stored in memory at commission time. If the values do not match those in memory, a positioning fault is given and the unit performs a safety shutdown.

These tests prove the control circuit to the inverter and help to guard against control parameters being changed on the inverter, which may affect the safety of the burner.

If the inverter is not performing correctly, start-up may be unreliable (See section 7).

Setting up the inverter for use with the Nexus PPC5000 fuel air ratio control system

The Nexus PPC5000 fuel air ratio control system will work with most inverters which meet the following criteria:

- 4-20mA speed reference input
- 4-20mA speed feedback output
- Remote run/stop command
- Fault relay for internal (inverter) and external (motor) faults
- Speed reference and feedback signals must be isolated from each other unless a resistor greater than the inverter input resistance is fitted in the feedback signal line.

Analogue inputs and outputs:

The analogue inputs and outputs (i.e. the 4-20mA reference and feedback signals) on the inverter should be configured in the following way:

- 4-20mA signal (this may be an option parameter and/or a board jumper)
- Speed reference input
- Speed reference output
- Minimum frequency 0Hz for 4mA signal
- Maximum reference frequency as required (nominally 60Hz) for 20mA signal
- Maximum feedback frequency same as reference for 20mA signal
- No filtering (time constant = 0.0) and no rate limiting

Digital inputs and outputs:

The digital inputs and outputs (i.e. the RUN/STOP and FAULT signals) on the inverter should be configured in the following way:

- RUN/STOP from external input (NOT inverter keyboard)
- RUN/STOP active high (i.e. energize to start)
- FAULT relay set for internal inverter fault or motor over temperature/current
- FAULT relay energized during normal operation (i.e. loss of power breaks circuit)

Control characteristics:

- The control characteristics of the inverter should be configured in the following way:
- Acceleration and deceleration time approximately 25 - 40 seconds, must be the same
- Straight line (linear) acceleration between reference points
- Motor to coast to a stop when RUN signal is removed
- No critical frequencies
- DC braking may be needed if motor deceleration is not linear

Motor characteristics:

The characteristics of the motor connected to the inverter should be entered into the inverter's option parameter list as follows:

- Motor nominal voltage, power, current and frequency (see motor plate)
- Motor current and temperature limits
- U/F ratio. Use the 'SQUARED' option for fans and pumps.
- Motor slip ratio

Setting up the Nexus PPC5000 fuel air ratio control system for use with a inverter drive

In order to use an inverter drive with a 4-20mA interface, an isolated drive board must be installed in one of the option slots. The following steps must then be taken:

- Enter option set mode.
- Map a drive (e.g. air damper 2) to the required inverter output using option parameters 05.X, or 06.X, and setup the control characteristics using options 22.X. See section 8 for details.
- Enter commission mode.
- Look at the display for the drive mapped to the inverter output (e.g. air damper 2). The display should show 0 for a feedback signal of 4mA and 999 for a feedback signal of 20mA. If the display is flashing 'LO', the feedback signal is less than 3.5mA or the polarity of the wiring is reversed. If the display is flashing 'HI', the feedback signal is more than 21.0mA or the polarity of the wiring is reversed. In both these cases, check the wiring and/or the option parameters on the inverter.
- If problems are encountered monitor the reference signal from the Nexus PPC5000 fuel air ratio control system. With the inverter drive selected, the UP key should increase the current gradually up to 20mA and the DOWN key should decrease the current gradually down to 4mA.

- For the rest of the commissioning procedure, treat the inverter drive in the same way as a motor. The inverter drive has a closed position (4mA), a purge position (20mA), an ignition position and up to 20 profile positions.

Troubleshooting inverter problems

PROBLEM	POSSIBLE CAUSE	SOLUTION
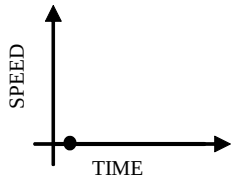	Inverter does not start because it does not receive a RUN signal.	Ensure that the inverter receives a RUN signal from the burner controller at the same time as the Nexus PPC 5000 fuel air ratio control system.
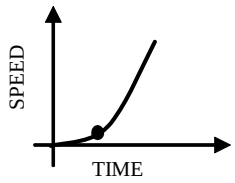	Inverter has a slow start. Late RUN signal. Nonlinear output from inverter or inverter's PID is enabled	Ensure that the inverter's slow start feature is disabled. Ensure that the inverter receives a RUN signal from the burner controller at the same time as the Nexus PPC 5000 fuel air ratio control system. Check that the inverters output is selected to be linear, and that the inverters own PID loop is disabled.
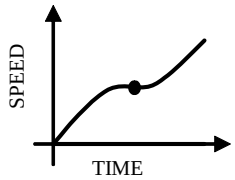	Current limit reached Noise	Slow down the inverter by increasing it's acceleration / deceleration time settings. Check cable shields.
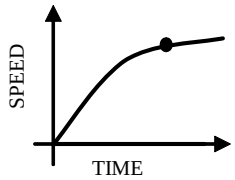	Current limit reached. Nonlinear output from inverter or inverter's PID is enabled.	Slow down the inverter by increasing it's acceleration / deceleration time settings. Check that the inverters output is selected to be linear, and that the inverters own PID loop is disabled.
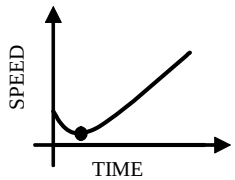	Fan failed to stop before restart.	Increase the inverter stop time by increasing option parameter 22.4 on the Nexus PPC 5000 fuel air ratio control system.
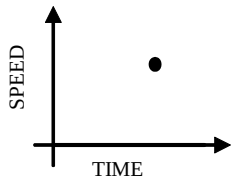	Control is unstable	Adjust option parameters 22.1 & 22.3 on the Nexus PPC 5000 fuel air ratio control system to reduce accuracy & slow down control response.

In extreme cases, it may be necessary to increase the inverter error tolerance to prevent safety shutdowns caused by positioning faults (set option 22.2 = 1). This must only be done if an inverter error of ±55 will not cause unsafe combustion.

Option Parameters

Option parameter list

WARNING: Use extreme care when entering option parameters. Incorrect data entry could cause a hazardous situation to occur.

Note: *If an option parameter is marked with '*', it is not possible to adjust its value using the site passcode. If using the supplier passcode and it is still not possible to adjust the value of an option parameter, the burner must be turned off first.*

Option 00.1 - Three digit site passcode (0 – 999)*

This is a three digit passcode which will allow the site engineer to enter option set mode only.

Options 00.5 and 00.6 – Serial communications passcodes (0 – 999)*

These passcodes enable boiler sequence control, serial data communications or both. For more details on how to enable these features, contact the equipment supplier and have the 6-digit CPU serial number available. Note that serial data communications is always available in commission ratio mode regardless of the passcode value, as long as a RAM chip is fitted (this chip must be obtained from Fireye Inc.).

Option 01.1 - Power supply frequency (50/60)*

The unit must be configured for the correct power supply frequency, which is required for use by the on-board software plausibility checking. The setting is either 50 or 60Hz.

Option 01.2 – Serial communications unit address (0 – 15)*

If the unit is to be connected to other equipment via the serial communications interface, it must be given a unique unit address using this option parameter.

Options 01.5 to 01.7 - Motor supply voltage (0/1)*

The basic drive board (AH221243) and isolated drive board (AH221244) are supplied in two different type variants. The first variant is suitable for low voltage (up to 50Vac) high current motors. The second variant is suitable for high voltage (up to 250Vac) low current motors. If the wrong variant is fitted, then the board will operate out of tolerance and may fail prematurely.

To protect against the wrong variant of board being fitted, the unit must be configured for the correct motor supply voltage. The unit checks the value of this option parameter against the board variants fitted. If the wrong type of board is fitted, a potentiometer supply fault will be given, and the unit will undergo a safety shutdown. These option parameters may be set to one of two possible values:

0 - The board variant is a low voltage type.

The motor supply is no higher than 50 Vac.

1 - The board variant is a high voltage type.

The motor supply is no higher than 250Vac.

The option parameters apply as follows:

1.5 - Basic drive board type

1.6 - Isolated drive board type in option slot 1

1.7 - Isolated drive board type in option slot 2

Option 02.1 - Enable keyboard auto/manual (0/1)*

In addition to remote auto/manual modulation mode selection using the mains inputs, the unit may be configured to allow modulation mode selection to be performed from the keyboard. Set this option to **1** to enable selection from the keyboard.

Option 02.2 - Bumpless transfer operation (0 – 2)*

This option parameter determines how the modulation mode and modulation rate are affected when power to the unit is interrupted. The options are as follows:

0 - The unit always powers up in AUTO modulation mode.

If the burner is fired up in MANUAL mode, the drives remain at low fire until modulated manually.

If the modulation mode is changed from AUTO to MANUAL while the burner is firing, the drives remain at their current positions.

1 - The unit powers up in the last selected modulation mode.

If the burner is fired up in MANUAL mode, the drives remain at low fire until modulated manually.

If the modulation mode is changed from AUTO to MANUAL while the burner is firing, the drives remain at their current positions.

2 - The unit powers up in the last selected modulation mode.

If the burner is fired up in MANUAL mode, the drives are modulated to the last positions used in MANUAL mode.

If the modulation mode is changed from AUTO to MANUAL while the burner is firing, the drives are modulated to the last positions used in MANUAL mode.

Option 02.6 - Position display type (0 – 3)*

It is possible to allow the servo-motor position to be displayed in angular degrees or percentage opening, relative to their respective close and purge positions. Further to this it is also possible to select the display resolution, selecting to 1 decimal place or no decimal place. Set this option to 0 to select angular degrees and one decimal place, 1 for angular degrees and no decimal place, 2 for percentage opening and one decimal place or 3 for percentage opening and no decimal place,

Option 03.1 - System temperature units (0/1)*

When the RTD modulation input is selected or a flue monitor interface (FMI) board is installed, the unit may be configured to display temperature in °C or °F. Set this option to 0 for °C units, or 1 for °F units.

Note: *Changing option 03.1 will only change the temperature units for the RTD input, the inlet temperature display and the flue temperature display. All other temperature related parameters such as setpoint control, limit values and alarm values must be entered to relate to the required range.*

Option 03.2 - Modulation / measured value input type (0/1)*

The modulation input (terminals PA16-PA18) may be configured for 0-5V or 4-20mA operation. Set this option to 0 to select 0-5V input type, or 1 to select 4-20mA input type.

Option 03.3 – Auxiliary modulation input function (0 – 2)*

The auxiliary modulation input (terminals PQ1-6) may be configured to perform a remote setpoint function.

0 - No function. The input is ignored.

1 - Remote setpoint. The input determines the control value for the PID loop when setpoint 1 is selected, providing the loop current is within the range of 3.5-21mA. If the current is outside this range, the unit reverts to using the control value given by option parameter 11.3. See parameters 11.7 & 11.8.

2 - Remote tracking input. The input determines the modulation rate, providing the loop current is within the range of 3.5-21mA. If the loop current is outside this range, the unit reverts to using the normal modulation rate (depending on current modulation mode).

This is different from using 'track modulation input' (option 11.0 = 0, or 13.0 = 1) because an out of range signal will cause those options to hold low fire.

This function will override both set points 1 and 2.

4mA = low fire, 20mA = high fire.

Option 03.5 - Modulation Speed (25 – 100%)*

This option allows adjustment of the maximum modulation speed between 25% and 100% of the fastest modulation possible while still obtaining the correct fuel/air ratio. When not modulating, all drives move at their maximum speeds.

Option 03.6 - Limit Modulation Range (0/1)*

By default, the unit modulates the burner between the set points P3 (low fire) and Px (high fire), where Px is the last setpoint entered in commission ratio mode. If oxygen trim is fitted, it is not possible for any drive position to be trimmed lower than point P3 (low fire) or higher than point Px (high fire).

This option parameter allows the normal modulation range of the burner to be limited so that the burner may only modulate between points P4 (one setpoint above low fire) and Px-1 (one setpoint below high fire). Since oxygen trim is not affected by this limitation, each drive may be trimmed between the points P3 and Px. This means that it is not possible to over-fire or under-fire the burner but full trim may still be achieved at high and low fire.

0 - Not limited. Burner modulates from P3 to Px
Oxygen trim works over full range from P3 to Px

1 - Normal modulation range limited to P4 to Px-1
Oxygen trim works over full range from P3 to Px.

Option 03.8 - Reset hours run (0/1)*

This option parameter allows the HOURS RUN display for all fuels to be reset to zero. To perform a reset, set this option parameter to 1 and leave setup mode. The HOURS RUN display will reset and this option parameter will automatically be set back to 0.

Options 04.1 to 06.5 - Drive output mapping (0 – 12)*

Each drive shown on the display may be mapped to a particular output. See section 8.2 for a diagrammatic explanation.

If a drive is not required (such as fuel 2 on a single fuel burner) then its mapping value should be set to zero. If a drive is required, then its corresponding mapping value should be set to a value between 1 and 12, which then maps that drive to the specified output (see table below).

OUTPUT NO.	OUTPUT	CONNECTOR	
0	No drive required	Output	Feedback Input
1	Basic drive board, motor output 1	PE2-PE3	PD16-PD18
2	Basic drive board, motor output 2	PE4-PE5	PD11-PD13
3	Basic drive board, motor output 3	PE7-PE8	PD8-PD10
4	Basic drive board, motor output 4	PE9-PE10	PD2-PD4
5	Isolated drive board 1, motor output 1,	PF7-PF8	PG8-PG10
6	Isolated drive board 1, motor output 2,	PF5-PF6	PG3-PG5
7	Isolated drive board 2, motor output 1	PJ7-PJ8	PK8-PK10
8	Isolated drive board 2, motor output 2	PJ5-PJ6	PK3-PK5
9	Isolated drive board 1, inverter 4-20mA 1	PH4-PH5	PH11-PH12
10	Isolated drive board 1, inverter 4-20mA 2	PH2-PH3	PH9-PH10
11	Isolated drive board 2, inverter 4-20mA 1	PL4-PL5	PL11-PL12
12	Isolated drive board 2, inverter 4-20mA 2	PL2-PL3	PL9-PL10

Options 04.1 to 04.3 - Set fuel drive output mapping (0 – 12)*

OPTION NO.	DRIVE	OUTPUT
04.1	Fuel 1	0-12 *
04.2	Fuel 2	0-12 *
04.3	Fuel 3	0-12 *

- Setting an option to 0 means that the corresponding drive is not available. Available outputs will depend on the option boards fitted.

Options 05.1 to 05.4 - Set air drive output mapping (0 – 12)*

OPTION NO.	DRIVE	OUTPUT
05.1	Air damper 1	0-12 *
05.2	Air damper 2	0-12 *
05.3	Air damper 3	0-12 *
05.4	Air damper 4	0-12 *

* Setting an option to 0 means that the corresponding drive is not available. Availability of outputs will depend on the option boards fitted.

Options 06.1 to 06.5 - Set option drive output mapping (0 – 12)*

OPTION NO.	DRIVE	OUTPUT
06.1	Option 1	0-12 *
06.2	Option 2	0-12 *
06.3	Option 3	0-12 *
06.4	Option 4	0-12 *
06.5	Option 5	0-12 *

Note: *The option drive output selection must be unique. O* Setting an option to 0 means that the corresponding drive is not available. The availability of outputs will depend on the option boards fitted.*

Options 07.0 to 07.7 - Set lead drive (0/1) & (1 – 12)*

The control algorithm requires one drive to be selected as the "lead" drive. The lead drive is the drive to which all other drive positions are referenced when the burner is modulating.

The position of the lead drive must always increase consistently as the other drives move up the firing range.

If a drive does not move in some areas of the firing range, then it should not be selected as the lead drive. For example, if the unit is controlling an inverter FD fan and an FD damper it is likely the damper will be fully open before high fire. In this case, the damper should not be selected as the lead drive.

If option 07.0 is set to 0, the unit will default to air damper 1 as the lead drive for all profile selections. If option 07.0 is set to 1, the lead drive is selectable individually for each profile.

OPTION 07.0	PROFILE NUMBER	0 - DEFAULT TO AIR DAMPER 1 1 - SELECT PER 'FUEL'
07.1	Profile 1	1 - 12 * see table on the following page
07.2	Profile 2	
07.3	Profile 3	
07.4	Profile 4	
07.5	Profile 5	
07.6	Profile 6	
07.7	Profile 7	

DRIVE NO. '*', SEE BELOW)	DRIVE NAME
1	Fuel 1
2	Fuel 2
3	Fuel 3
4	Option 1
5	Option 2
6	Option 3
7	Air damper 1
8	Air damper 2
9	Air damper 3
10	Air damper 4
11	Option 4
12	Option 5

* If all drives have not been selected, then not all drive numbers will be available.

Option 08.1 - Ignition time (0 – 999)*

The time (in seconds) at which the drives remain in their ignition positions before the system moves the drives to low fire. May be set between 0 and 999 seconds inclusive.

Option 08.2 - Low fire hold time (0 – 999)*

The time (in seconds) at which the drives remain in their low fire positions before the system begins to modulate. May be set between 0 and 999 seconds inclusive.

Option 09.1 - Post purge time (1 – 999)*

The time (in seconds) at which the drives remain in their purge positions after the burner has turned off. If this option is set to 0, the drives will move straight to their closed positions after the burner has turned off and there is no post purge. If a post purge is desired, this option may be set between 1 and 999 seconds inclusive.

Note: *This optional software controlled postpurge must not be used to replace the pre-purge as dictated by the external burner controller.*

Option 10.1 - Alarm relay level (0 – 7)*

The alarm relay may be selected to operate for different types of alarms:

0 - Alarm relay off

1 - Flue gas limit faults only

2 - Secondary (24 hour) faults only

3 - Flue gas limit and secondary (24 hour) faults

4 - Primary (e.g. drive positioning) faults only

5 - Primary and flue gas limit faults

6 - Primary and secondary (24 hour) faults

7 - ALL FAULTS - Primary, secondary and flue gas limits

Option 11.0 - Setpoint 1 input type (0 – 4)*

The setpoint 1 input type must be selected as one of five options. See section 8.3 for information on how this function is performed.

0 - Track modulation input

(Where minimum input signal = low fire, maximum input signal = high fire)

1 - Resistance thermometer (RTD) input (0-350°C or 32-662°F)

2 – Measured value input display range up to 999 with PID control

3 – Measured value input display range up to 99.9 with PID control

4 – Measured value input display range up to 9.99 with PID control

Option 13.0 - Setpoint 2 input type (0 – 5)*

The setpoint 2 input type must be selected as one of six options. See section 8.3 for information on how this function is performed.

0 - Setpoint 2 not available

1 - Track modulation input

(Where minimum input signal = low fire, maximum input signal = high fire)

2 - Resistance thermometer (RTD) input (0-350°C or 32-662°F)

3 - Measured value input display range up to 999 with PID control

4 - Measured value input display range up to 99.9 with PID control

5 - Measured value input display range up to 9.99 with PID control

Option 11.1 - Setpoint 1 zero value (0 – 999 / 00.0 – 99.9 / 0.00 – 9.99)*

Option 13.1 - Setpoint 2 zero value (0 – 999 / 00.0 – 99.9 / 0.00 – 9.99)*

When the appropriate setpoint is selected, this is the measured value which is displayed when the minimum signal level (0V or 4mA) appears at the modulation input. This parameter is not used when a track modulation or RTD input type is selected.

Option 11.2 - Setpoint 1 span value (0 – 999 / 00.0 – 99.9 / 0.00 – 9.99)*

Option 13.2 - Setpoint 2 span value(0 – 999 / 00.0 – 99.9 / 0.00 – 9.99) *

When the appropriate setpoint is selected, this is the measured value which is displayed when the maximum signal level (5V or 20mA) appears at the pressure input. This parameter is not used when a track modulation or RTD input type is selected.

Option 11.3 - Setpoint 1 control value (0 – 999 / 00.0 – 99.9 / 0.00 – 9.99)

Option 13.3 - Setpoint 2 control value (0 – 999 / 00.0 – 99.9 / 0.00 – 9.99)

This is the control value that is used in the PID control loop for setpoint 1 or 2. When the unit is in auto mode, the PID control loop will modulate the boiler to maintain the measured value at the same level as this parameter.

The parameter may be adjusted if the following conditions exist:

- The unit is in set-up or commission mode.
- Option 11.0 / 13.0 is not set to zero.
- The appropriate setpoint is selected.

Option 11.4 - Setpoint 1 proportional term (0 – 100%)

Option 13.4 - Setpoint 2 proportional term (0 – 100%)

This is the proportional band term which is used in the PID control loop for the appropriate setpoint. It may be set to any value from 0 to 100%, where 0% means no proportional band.

The parameter may be adjusted if the following conditions exist:

- The unit is in set-up or commission mode.
- Option 11.0 / 13.0 is not set to zero.
- The appropriate setpoint is selected.

Option 11.5 - Setpoint 1 integral term (0 – 100)

Option 13.5 - Setpoint 2 integral term (0 – 100)

This is the integral term which is used in the PID control loop for the appropriate setpoint. It may be set to any value from 0 to 100, where 0 means no integral term.

The parameter may be adjusted if the following conditions exist:

- The unit is in set-up or commission mode.
- Option 11.0 / 13.0 is not set to zero.
- The appropriate setpoint is selected.

Option 11.6 - Setpoint 1 derivative term (0 – 100)

Option 13.6 - Setpoint 2 derivative term (0 – 100)

This is the derivative term which is used in the PID control loop for the appropriate setpoint. It may be set to any value from 0 to 100, where 0 means no derivative term.

The parameter may be adjusted if the following conditions exist:

- The unit is in set-up or commission mode.
- Option 11.0 / 13.0 is not set to zero.
- The appropriate setpoint is selected.

Option 11.7 - Setpoint 1 remote zero value (0 - 999)*

When setpoint 1 is selected and the remote setpoint function is enabled (see option parameter 03.3), this is the PID control value displayed when a 4mA signal is present on the auxiliary modulation input. See section 8.3.

There is no such function for setpoint 2.

This parameter is not used when a track modulation input type is selected.

Option 11.8 - Setpoint 1 remote span value (0 – 999)*

When setpoint 1 is selected and the remote setpoint function is enabled (see option parameter 03.3), this is the PID control value displayed when a 20mA signal is present on auxiliary modulation input.

There is no such function for setpoint 2.

This parameter is not used when a track modulation input type is selected.

Option 12.0 - Setpoint 1 control limit type (0 – 2)

Option 14.0 - Setpoint 2 control limit type (0 – 2)

This option parameter defines the control limit type for the appropriate setpoint.

The following values are possible for this parameter:

0 - No limits

1 - Absolute limit

2 - Deviation limit

When an absolute limit is selected, the values entered in option parameters 12.1 to 12.4 OR 14.1 to 14.4 are the actual limit values.

When a deviation limit is selected, the values entered in option parameters 12.1 to 12.4 OR 14.1 to 14.4 form a deviation from the appropriate setpoint control value. This means that if the setpoint control value is changed, the limits are automatically changed correspondingly.

Option 12.1 - Setpoint 1 low limit control value (0 – 999 / 00.0 – 99.9 / 0.00 – 9.99)

Option 14.1 - Setpoint 2 low limit control value (0 – 999 / 00.0 – 99.9 / 0.00 – 9.99)

If the controlled shutdown triac is off, this parameter defines the highest measured value at which the triac will be switched on.

The parameter may be adjusted if the following conditions exist:

- The unit is in set-up or commission mode.
- Option 12.0 / 14.0 is not set to zero.
- The appropriate setpoint is selected.

Option 12.2 - Setpoint 1 high limit control value (0 – 999 / 00.0 – 99.9 / 0.00 – 9.99)

Option 14.2 - Setpoint 2 high limit control value (0 – 999 / 00.0 – 99.9 / 0.00 – 9.99)

If the controlled shutdown triac is on, this parameter defines the lowest measured value at which the triac will be switched off.

The parameter may be adjusted if the following conditions exist:

- The unit is in set-up or commission mode.
- Option 12.0 / 14.0 is not set to zero.
- The appropriate setpoint is selected.

Option 12.3 - Setpoint 1 measured value low alarm (0 – 999 / 00.0 – 99.9 / 0.00 – 9.99)

Option 14.3 - Setpoint 2 measured value low alarm (0 – 999 / 00.0 – 99.9 / 0.00 – 9.99)

If the measured value falls below the value of this parameter and option 12.0 / 14.0 is not set to zero, the setpoint low alarm will be activated. For the alarm to be active, options 16.1 - 16.3 must be set such that the setpoint low alarm triggers a digital output.

The parameter may be adjusted if the following conditions exist:

- The unit is in set-up or commission mode.
- Option 12.0 / 14.0 is not set to zero.
- The appropriate setpoint is selected.

Option 12.4 - Setpoint 1 measured value high alarm (0 – 999 / 00.0 – 99.9 / 0.00 – 9.99)

Option 14.4 - Setpoint 2 measured value high alarm (0 – 999 / 00.0 – 99.9 / 0.00 – 9.99)

If the measured value rises above the value of this parameter and option 12.0 / 14.0 is not set to zero, the setpoint high alarm will be activated. For the alarm to be active, options 16.1 - 16.3 must be set such that the setpoint high alarm triggers a digital output.

The parameter may be adjusted if the following conditions exist:

- The unit is in set-up or commission mode.
- Option 12.0 / 14.0 is not set to zero.
- The appropriate setpoint is selected.

Option 12.5 – Setpoint 1 warming limit (0 – 999 / 00.0 – 99.9 / 0.00 – 9.99)

Option 14.5 – Setpoint 2 warming limit (0 – 999 / 00.0 – 99.9 / 0.00 – 9.99)

If the boiler's measured temperature/pressure is below this limit, the burner will be held at low fire. This low fire hold may be overridden using manual modulation mode.

Options 15.1 and 15.2 - Auxiliary input functions (0 – 6)*

WARNING: If an auxiliary input is set to provide a fault mute facility, the "switch" to which it is connected to must be local to the burner.

Auxiliary inputs 1 and 2 (terminals PC15 and PC16 respectively) may be configured to perform a variety of different functions.

Option parameter 15.1 determines the function of auxiliary input 1, and option parameter 15.2 determines the function of auxiliary input 2.

If both inputs are selected to have the same function, input 2 is ignored and input 1 is used.

The auxiliary input functions are detailed below.

0 - No function. The input is ignored.

1 - Setpoint select. The level of the input determines whether setpoint 1 or setpoint 2 is used. A low level selects setpoint 1.

2 - Release to ignite. Once the system has purged, the drives will move to their ignition positions. A high level on the input will turn the ignition triac on and fire the burner.

3 - Release to modulate. Once the burner has ignited and the ignition time has elapsed, the drives will move to their low fire positions. After the low fire hold time has elapsed, a high level on the input will permit the drives to modulate.

4 - Lead boiler select. If multiple boiler sequencing has been commissioned, a high level on the input selects the unit as the lead boiler.

5 - Fault mute. The input performs the same function as the fault mute key. If there is a high level on the input for approximately one second, the alarm is muted, a high level on the input for approximately three seconds, all cleared faults are removed

6 - Trim on/off. The input is used to enable or disable the oxygen trim function. Option parameter 30.5 (oxygen input function) must be set to 1.

Options 16.1, 16.2 and 16.3 - Digital output functions (0 – 12)*

Digital outputs 1, 2 and 3 (terminals PB8, PB9 and PB10 respectively) may be configured to perform a variety of different functions.

Option parameter 16.1 determines the function of digital output 1, parameter 16.2 determines the function of output 2, and parameter 16.3 determines the function of output 3.

The digital output functions are detailed below.

0 - No function. The output will always be off.

1 - Manual selected from keyboard. The output will be turned on when hand modulation mode has been selected from the keyboard.

2 - O_2 alarm. The output will be turned on when the measured oxygen level falls outside the high or low alarm levels.

3 - Flue gas high alarm. The output will be turned on when a measured flue gas level which is not oxygen exceeds its high alarm value.

4 - O_2 or flue gas alarm. The output is turned on when any measured flue gas level falls outside the high or low alarm levels.

5 - Setpoint low alarm exceeded. The output is turned on when the setpoint low alarm (determined by options 12.3 or 14.3) is activated.

6 - Setpoint high alarm exceeded. The output is turned on when the setpoint high alarm (determined by options 12.4 or 14.4) is activated.

7 - Setpoint high or low alarm exceeded. The output is turned on when the setpoint low alarm (determined by options 12.3 or 14.3) or the setpoint high alarm (determined by options 12.4 or 14.4) is activated.

8 - Purging. The output is turned on when the drives are at their pre-purge positions and the purge prove output is activated.

9 - Igniting. The output is turned on when the drives are at their ignition positions and the ignition prove output is activated.

10 - Modulating. The output is turned on when the burner is modulating (for any modulation mode, including sequencing).

11 - Auxiliary input 1 high alarm – The output is activated when auxiliary input 1 exceeds its high alarm value (see option parameters 53.X).

12 - Auxiliary input 2 high alarm - The output is activated when auxiliary input 2 exceeds its high alarm value (see option parameters 54.X).

Option 20.0 - Profile mapping default (0 – 1)*

Option 20.1 - 20.7 Profile mapping (1 – 7)*

If option parameter 20.0 is set to 0, the profile mappings will assume default values. In this case, the profile 1 input selects fuel 1, profile 2 input selects fuel 2 and profile 4 input selects fuel 3.

If option parameter 20.0 is set to 1, it is possible to determine which fuels are to be fired when a given profile is selected. Refer to the table on the following page for details.

OPTION	PROFILE NUMBER	0- DEFAULT TO CORRESPONDING FUEL 1 - SELECT PER "PROFILE"
20.1	Profile 1	1 -7, where: 1 = Fuel 1only 2 = Fuel 2 only 3 = Fuel 1 + 2 4 = Fuel 3 only 5 = Fuel 1 + 3 6 = Fuel 2 + 3 7 = Fuel 1, 2 + 3
20.2	Profile 2	
20.3	Profile 3	
20.4	Profile 4	
20.5	Profile 5	
20.6	Profile 6	
20.7	Profile 7	

For example, if fuels 2 and 3 are to be fired when profile 2 is selected, set option parameter 20.2 to 6.

Option 21.0 - Default air drive select (0 / 1)*

Options 21.1 to 21.7 - Air drive select (0 / 1) *

It is possible to prevent selected air drives from being used for each profile. Option 21.0 specifies whether this is the case.

0 - All mapped air drives will be used for every profile.

1 - It is possible to stop air damper 2, air damper 3 and air damper 4 from being used for each profile by using option parameters 21.1 to 21.7.

Option parameters 21.1 to 21.7 choose if certain air dampers will be used for profiles 1 to 7. The parameters may be set to the following values (provided that option 21.0 = 1):

0 - All air drives will be used except air dampers 2, 3 and 4.

1 - All air drives will be used except air dampers 3 and 4.

2 - All air drives will be used except air dampers 2 and 4.

3 - All air drives will be used except air damper 4.

4 - All air drives will be used except air dampers 2 and 3.

5 - All air drives will be used except air damper 3.

6 - All air drives will be used except air damper 2.

7 - All air drives will be used.

For example, it is possible to set up the system so that air damper 2 is not used for profile 3 by setting option parameter 21.3 to 6. See section xxx.

Option 22.1 - Inverter control accuracy (0 / 1)*

This parameter affects all inverters connected to the unit.

0 - Low accuracy (normal setting). Control will be performed to within approximately ±0.45Hz for a 0-60Hz system.

1 - High accuracy. Control will be performed to within approximately ±0.15Hz for a 0-60Hz system.

Note: *When using the high accuracy setting, the unit may have difficulty with controlling the speed of the inverter. If this occurs, use the low accuracy setting for reliable operation.*

WARNING: Only use the large tolerance setting if an inverter error of up to±55 will not cause unsafe combustion.

Option 22.2 - Inverter error tolerance (0 / 1)*

This option parameter affects all inverters connected to the unit.

0 - Small tolerance (normal setting). The unit will perform a safety shutdown if the inverter positioning error exceeds ±30 for 15 seconds or ±55 for 1 second (units conform to those seen on the display).

1 - Large tolerance. The unit will perform a safety shutdown if the inverter positioning error exceeds ±55 for 1 second (units conform to those seen on the display).

Note: *Only use the large tolerance setting if an inverter error of up to ±55 will not cause unsafe combustion.*

Option 22.3 - Inverter closed loop gain (15 – 125%)*

This option parameter affects all inverters connected to the unit.

For normal operation, use 100%. If the inverter control is unstable, reducing this value has the effect of damping the inverter's response as its speed approaches its setpoint.

Option 22.4 - Inverter stop time (0 – 100 seconds)*

Determines the minimum time between a burner shutdown and subsequent startup. Set this parameter to give the inverter sufficient time to stop before the burner restarts.

Option 25.0 - Boiler sequencing enable (0 - 1)

This option parameter enables boiler sequencing control via the RS485 serial communications interface.

0 - Sequence control disabled. The unit operates in a stand-alone mode.

1 - Sequence control enabled. The unit will modulate and sequence its boiler according to instructions received from the lead boiler. If communication with the lead boiler is lost, the unit operates in stand-alone mode.

Option 25.1 - Boiler priority (0 - 9)

This option parameter determines the order in which the boiler will be fired when operating under sequence control. After the lead boiler, the next boiler to be fired is the boiler with the next highest priority. The examples below show how the priorities are chosen for a ten boiler sequencing system.

e.g. 1: If the lead boiler priority is 0, the sequence is: LEAD, 1, 2, 3, 4, 5, 6, 7, 8, 9

e.g. 2: If the lead boiler priority is 5, the sequence is: LEAD, 6, 7, 8, 9, 0, 1, 2, 3, 4

Option 25.2 - Low fire burner power output (0.0 - 99.9MW)*

Option 25.3 - High fire burner power output (0.0 - 99.9MW)*

These option parameters must be set to the power output from the burner when operating at low fire and at high fire. These values are used by boiler sequencing to determine the switching on and off points for the boiler.

Option 25.4 - Lead boiler select (0 - 1)

When the unit is under sequence control, setting this option parameter to 1 will force the unit to assert itself as the lead boiler.

If this option parameter is set to 1 AND/OR an auxiliary input is high (assuming the auxiliary input has been configured for lead boiler select - see option parameters 10.1 and 10.2), the unit will assert itself as the lead boiler.

If two or more units have been set as lead, sequencing is disabled.

Option 25.5 - Standby low limit control value (0 - 999 / 00.0 - 99.9 / 0.00 - 9.99)

Option 25.6 - Standby high limit control value (0 - 999 / 00.0 - 99.9 / 0.00 - 9.99)

If the unit is placed in standby mode by boiler sequence control, the boiler's pressure is maintained between these two limit values by firing up at low fire when the low limit is transgressed, and switching off when the high limit is attained.

Option 25.7 – Sequencing delay time (5 – 15 minutes)*

This is the minimum time between turning a boiler on or off when in boiler sequencing mode. If it is too long, it may take too much time for a boiler to respond to the steam demand. If too short, boilers may be turned on unnecessarily.

Option 30.0 – Oxygen probe select (0 – 2)*

This option parameter is only available if an FMI board is fitted in option slot 2.

0 - No probe selected. The oxygen level display will not be available.

1 - FIREYE oxygen probe for monitoring or trim with no pre-purge test.

2 - FIREYE oxygen probe for monitoring or trim with a pre-purge test. If the measured oxygen level is less than 18.0% at the end of the pre-purge period, F76 is given and oxygen trim will be disabled.

Option 30.1 - Oxygen probe calibration offset value (0 – 999)*

This option parameter is only available if option 30.0 is set to **1** and an FMI board is installed in slot 2.

This option parameter must be set to the calibration offset value which is specified with the probe supplied.

Option 30.2 - Oxygen probe calibration gain value (0 – 999)*

This option parameter is only available if option 30.0 is set to **1** and an FMI board is installed in option slot 2.

This option parameter must be set to the calibration gain value which is specified with the probe supplied.

Option 30.3 - Oxygen probe calibration gas concentration (0.00 – 9.99%)

This option parameter is only available if option 30.0 is set to **1** and an FMI board is installed in option slot 2. This option parameter must be set to the percentage oxygen concentration of the calibration gas used if the probe is to be calibrated using a reference gas (see option parameter 30.6). The range of this parameter is 0.00 - 9.99%.

Option 30.4 - Oxygen probe calibration resistance value (0 – 999)*

This option parameter is only available if option 30.0 is set to **1** and an FMI board is installed in option slot 2.

This option parameter must be set to the calibration resistance value specified for the supplied probe.

Option 30.5 - Oxygen input function (0/1)

This option parameter is only available if option 30.0 is not set to zero and an FMI board is installed in option slot 2.

Using this option parameter, it is possible to configure the system to use the oxygen input for a monitoring function or trim function. The two functions are explained below:

0 - Monitor only. The oxygen input on the FMI board is only used to provide a display of the measured oxygen level.

1 - Closed loop trim. The oxygen input on the FMI board is used to provide both a display of the measured oxygen level and a feedback signal for closed loop trim control of the fuel/air ratio.

Option 30.6 - Oxygen probe calibrate enable (0 – 2)

This option parameter is only available if option 30.0 is set to **1** and an FMI board is installed in option slot 2.

This option parameter must be used when calibrating the FIREYE oxygen probe. There are three possible values:

0 - No calibrate. This is the normal operating condition, where the probe is used to measure the oxygen concentration in the flue.

1 - Calibrate in air. The probe will be calibrated for "offset" at the normal atmospheric oxygen concentration.

2 - Calibrate in reference gas. The probe will be calibrated for "gain" in a reference gas with a nominal oxygen concentration of 3.0%.

Once this calibration has been successfully completed the values in 30.1 and 30.2 will be automatically updated.

Option 30.7 - Boiler transport delay (5 – 60 seconds)*

This parameter is only available if option 30.5 has been set for closed loop oxygen trim.

Boiler transport delay is the time taken for "gas" to travel from the burner to the oxygen probe. This delay varies with burner fire rate.

In order for the oxygen trim control loop to be stable, this parameter must be set accurately to the transport delay of the boiler when at low fire. This option may be set between 5 and 60 seconds inclusive.

- To measure the transport delay, ignite the burner and enter adjust ratio mode. Select the low fire setpoint and allow time for the flue oxygen reading to settle. Once the oxygen reading is steady, make a step change to the fuel/air ratio and start a timer. As soon as the measured oxygen reading begins to change, stop the timer. Set the option parameter to the recorded timer value in seconds.
- Automatic trim commissioning (option 30.9) will set this automatically. However the value must be checked by the engineer.

Option 30.8 - Reset oxygen trim profile (0/1).

This option parameter allows the learned trim profile to be reset. If the option is set to 1 any learn profile currently held in memory will be reset and the trim drives will return to their commissioned positions for the corresponding modulation position. Once the profile has been reset this option parameter will automatically be reset to 0.

Option 30.9 – Automatic trim commissioning (0 / 1)*

0 - Not selected.

1 - Automatic trim commissioning will be performed under the following conditions:

- An oxygen probe is fitted and fully operational
- The unit is in adjust ratio with the burner firing a single fuel only
- A hydrocarbon ratio has been entered for the current fuel (see option parameters 36.4 – 36.6).

Option 32.0 - Trim drive default (0/2)*

Options 32.1 to 32.7 - Trim drive select (0/1)*

Option 32.0 is only available if option 30.5 (oxygen input function) has been set for closed loop oxygen trim.

It is possible for the system to perform oxygen trim control either by adjusting the positions of the fuel drives or the positions of two air drives (AIR DAMPER 1 and AIR DAMPER 2). The system never applies oxygen trim to AIR DAMPER 3 or 4 or OPTION 1 - 6.

If option 32.0 is set to 0, the system will default to trimming the AIR DAMPER 1 and AIR DAMPER 2 for all profile combinations. Option parameters 32.1 to 32.7 will not be available.

If option 32.0 is set to 1, the system will default to trimming the selected fuel drives for all profile selections. Option parameters 32.1 to 32.7 will not be available.

If option 32.0 is set to 2, it is possible to select the trim drive individually for each profile combination using option parameters 32.1 to 32.7. These options may be set to one of two possible values:

0 - Trim on AIR DAMPER 1 and AIR DAMPER 2

1 - Trim on selected fuel drives

Option 33.0 - Trim limit default (0/1)*

Options 33.1 to 33.7 - Trim limits (0.0 – 25.0)*

Option 33.0 is only available if option 30.5 (oxygen input function) has been set for closed loop oxygen trim.

It is possible for the system to trim the air or fuel drives up to a maximum deviation of ±25.0% of the total air or fuel flow for the chosen trim drives.

If option 33.0 is set to 0, the default trim limit will be ±5.0% for all profile selections. Option parameters 33.1 to 33.7 will not be available.

If option 33.0 is set to 1, it is possible to individually adjust the trim limit for each profile selection using option parameters 33.1 to 33.7. The trim limit may be adjusted from 0.0% (no trim) up to a maximum of ±25.0% (maximum allowable trim).

Options 34.1 to 34.7 - Trim integral gain (0.0 – 99.9%)*

Options 34.1 to 34.7 are only available if option 30.5 (oxygen input function) has been set for closed loop oxygen trim.

In order for the oxygen trim control loop to be stable, the integral gain must be set correctly. Options 34.1 to 34.7 allow the integral gain to be set individually for each profile combination to any value between 0.0 and 99.9%. As a general recommendation, the integral gain should be initially set to 15.0%.

If the burner is firing, it is only possible to make an adjustment to the option parameter which relates to the selected profile. If the burner is not firing, the integral gain for any profile selection may be adjusted.

Option 35.0 - Trim proportional gain default (0/1)*

Options 35.1 to 35.7 - Trim proportional gain (0.0 – 99.9%)*

Options 35.0 to 35.7 are only available if option 30.5 (oxygen input function) has been set for closed loop oxygen trim.

If oxygen trim proportional gain is not required for any profile selection, set option parameter 35.0 to 0.

If oxygen trim proportional gain is required, set option parameter 35.0 to 1. Option parameters 35.1 to 35.7 will then become available. Options 35.1 to 35.7 allow the loop gain to be set individually for each profile selection to any value between 0.0 and 99.9%.

Option 36.0 – Inlet temperature sensor (0 – 2)*

This option parameter is only available if option 30.0 (oxygen input select) is not set to zero. The option may be set to one of four possible values:

0 - Inlet temperature sensor not fitted.

1 - Inlet temperature sensor fitted and connected to PN1-2. Calculated burner gross efficiency will be displayed if the calorific value, hydrocarbon ratio and flow values have been entered for the fuel that is firing. Efficiency will not be displayed when firing multiple fuel combinations.

2 - Inlet temperature sensor fitted and connected to PN1-2. Calculated burner net efficiency will be displayed if the calorific value, hydrocarbon ratio and flow values have been entered for the fuel that is firing. Efficiency will not be displayed when firing multiple fuel combinations.

Options 36.1 to 36.3 - Calorific values of fuels 1 to 3 respectively (0.0 – 99.9)

These option parameters are only available if option 36.0 (inlet temperature sensor) is not set to zero.

If a display of calculated burner efficiency is required, the calorific value of the required fuels must be entered. May be set between 0.0 and 99.9 MJkg-1 inclusive.

A display of burner efficiency is not available when firing multiple fuel combinations.

Options 36.4 to 36.6 - Hydrocarbon ratios of fuels 1 to 3 respectively (0.00 – 9.99)

These option parameters are only available if option 36.0 (inlet temperature sensor) is not set to zero.

If a display of calculated burner efficiency is required, the hydrocarbon ratios for the required fuels must be entered. May be set between 0.0 and 9.99 inclusive, where the value entered is the hydrocarbon ratio x 10. For example, for a hydrocarbon ratio of 0.157, a value of 1.57 should be entered.

Display of burner efficiency is not available when firing multiple fuel combinations.

The table below shows the calorific values and hydrocarbon ratios of several common fuels. These values should be used as a guide only. Gross calorific values should be used for display of gross efficiency.

FUEL	GROSS CALORIFIC VALUE	NET CALORIFIC VALUE	HYDROCARBON RATIO (x10)
Gas	52.8	47.6	3.20
Light Oil	45.6	42.8	1.57
Medium Oil	43.1	40.8	1.35
Heavy Oil	42.9	40.5	1.28

Option 36.7 - Boiler radiated heat loss (0.0 – 9.99%)*

This option parameter is only available if option 36.0 (inlet temperature sensor) is not set to zero.

For accurate calculation of boiler gross efficiency, this option parameter must be set to the heat lost through the shell of the boiler at high fire as a percentage of the burner's output at high fire. The range of this parameter is 0.0 to 9.9%.

Option 37.0 - Flue temperature alarm select (0/1)*

Option parameter 37.0 is only available with a flue monitor interface (FMI) board installed in option slot 2.

If option 37.0 is set to 0, the flue temperature high and low alarms are disabled.

If option 37.0 is set to 1, the flue temperature high and low alarms are enabled and option parameters 37.1 to 38.7 become available.

Options 37.1 to 37.7 - Flue temperature low alarm values (0 – 999)*

Using option parameters 37.1 to 37.7, it is possible to set a different flue temperature low alarm value for each profile combination. Each option parameter may be set to any value between 0 and 999 inclusive. The temperature units should be set with respect to option parameter 03.1.

If the burner is firing, it is only possible to make an adjustment to the option parameter which relates to the selected profile. If the burner is not firing, the low alarm value for any profile selection may be adjusted.

When the flue temperature drops below the low alarm value for the selected profile, a fault number will appear.

Options 38.1 to 38.7 - Flue temperature high alarm values (0 – 999)*

Using option parameters 38.1 to 38.7, it is possible to set a different flue temperature high alarm value for each profile selection. Each option parameter may be set to any value between 0 and 999 inclusive. The temperature units should be set with respect to option parameter 03.1.

If the burner is firing, it is only possible to make an adjustment to the option parameter which relates to the selected profile. If the burner is not firing, the high alarm value for any profile selection may be adjusted.

When the flue temperature rises above the high alarm value for the selected profile combination, a fault number will appear. See section xxx for details of fault numbers.

Option 39.0 - Oxygen alarm select (0 – 2)*

Option parameter 39.0 is only available when option 30.0 (oxygen input select) is not set to zero.

Since the oxygen alarm values relate to the oxygen setpoint values, oxygen setpoint values must first be entered in adjust ratio mode.

0 - Alarms disabled. Oxygen low and high alarms are disabled.

1 - Alarms enabled, no safety shutdown. Oxygen low and high alarms are enabled and option parameters 39.1 to 42.7 will become available. If an alarm value is exceeded, a fault number will appear but no safety shutdown will occur.

2 - Alarms enabled with safety shutdown. Oxygen low and high alarms are enabled and option parameters 39.1 to 42.7 will become available. If an alarm value is exceeded, a fault number will appear and a safety shutdown will occur.

Options 39.1 to 39.7 - Oxygen low alarm values at low fire (0.0 – 99.9%)*

Options 40.1 to 40.7 - Oxygen low alarm values at high fire (0.0 – 99.9%)*

Options 41.1 to 41.7 - Oxygen high alarm values at low fire (0.0 – 99.9%)*

Options 42.1 to 42.7 - Oxygen high alarm values at high fire (0.0 – 99.9%)*

Using option parameters 39.1 to 40.7, it is possible to set different oxygen alarm values at high fire and low fire for each profile.

At firing positions other than high and low fire, the alarm limit is interpolated between the two points. For example, if the oxygen limit has been entered as 5% of setpoint at low fire and 10% of setpoint at high fire, the limit at mid fire will be 7.5%.

The alarm limits may set to any value between 0.0 and 99.9%, where the value entered relates to a percentage deviation from each oxygen setpoint in the firing range.

If the burner is firing, it is only possible to make an adjustment to the option parameters which relate to the selected profile. If the burner is not firing, the alarm values for any profile selection may be adjusted.

An oxygen low alarm will be caused by one or more of the following events:

- The level drops below 0.5% O2 for 30 seconds
- The level drops below the low alarm limit for 2 minutes
- The level drops below twice the low alarm limit for 30 seconds

An oxygen high alarm will be caused by one or more of the following events:

- The level rises above the high alarm limit for 2 minutes
- The level rises above twice the high alarm limit for 30 seconds

Option 43.0 – Fuel flow select (0 / 1)*

Options 43.1, 43.2, 43.3 – High fire fuel flow, fuels 1, 2, 3 (0 – 999 / 0.0 – 99.9 units per hour)*

Option 43.0 defines the function as below:

0 - Totalized and instantaneous fuel flow not calculated.

1 - Totalized and instantaneous fuel flow calculated using the values entered in option parameters 43.1 – 43.3, with units of XXX per hour. Flow values must be entered for the fuel flow to be calculated.

2 - Totalized and instantaneous fuel flow calculated using the values entered in option parameters 43.1 – 43.3, with units of XX.X per hour. Flow values must be entered for the fuel flow to be calculated.

The instantaneous fuel flow for the currently selected profile may be seen on EK76. Totalized fuel flows are only available via the serial communications link using the ComFire software package. Fuel flows are not calculated when the unit is firing a multiple fuel profile.

For the system to calculate fuel flow, the high fire fuel flow must be entered. The display format may be 0 or 1 decimal places, depending on the value of option parameter 43.0.

The instantaneous fuel flow for the currently selected profile may be seen on EK76. Totalized fuel flows are only available via the serial communications link using the ComFire software package. Fuel flows are not calculated when the unit is firing a multiple fuel profile.

For the system to calculate fuel flow, the high fire fuel flow must be entered. The display format may be 0 or 1 decimal places, depending on the value of option parameter 43.0.

Option 45.0 - CO input select (0/1)*

Option 45.1 - CO input zero value (0 – 999)*

Option 45.2 - CO input span value (0 – 999)*

Option 45.0 is only available if a flue monitor interface (FMI) board is fitted in option slot 2, and the options are as follows:

0 - CO sensor not fitted

1 - CO sensor connected to 4-20mA CO input (PM10-11).

If option 45.0 is set to 1, options 45.1 & 45.2 give the zero and span values for the input. There are the measured values that are displayed when 4mA and 20mA appear at the 4-20mA CO input (PM10-11) on the FMI board.

Note: *The values entered for these option parameters are in units of x10 p.p.m, and therefore an entered value of 999 means 9990 p.p.m.*

Option 46.0 - CO level high alarm select (0/1)*

Options 46.1 to 46.7 - CO level high alarm values (0 – 999)*

Option parameter 46.0 is only available if option 45.0 (CO input select) is not set to zero.

If option 46.0 is set to 0, the CO level high alarm is disabled.

If option 46.0 is set to 1, the CO level high alarm is enabled and option parameters 46.1 to 46.7 become available.

Using option parameters 46.1 to 46.7, it is possible to set a different CO level high alarm value for each profile combination. Each option parameter may be set to any value between 0 and 999 inclusive, in units of p.p.m. Remember that the CO zero and span is entered in units of x10 p.p.m.

If the burner is firing, it is only possible to make an adjustment to the option parameter which relates to the selected profile combination. If the burner is not firing, the high alarm value for any profile combination may be adjusted.

If the CO level exceeds the high alarm value for the selected profile combination, a fault number will appear. See section 9 for details of fault numbers.

Option 47.0 - Smoke input select (0/1)*

Option 47.1 - Smoke input zero value (0 – 99.9)*

Option 47.2 - Smoke input span value (0 – 99.9)*

Option 47.0 is only available if a flue monitor interface (FMI) board is fitted in option slot 2, and the options are as follows:

0 - Smoke sensor not fitted

1 - Smoke sensor connected to 4-20mA smoke input (PM12-13).

If option 47.0 is set to 1, options 47.1 & 47.2 give the zero and span values for the input. There are the measured values that are displayed when 4mA and 20mA appear at the 4-20mA smoke input (PM12-13) on the FMI board.

Option 48.0 - Smoke level high alarm select (0/1)*

Options 48.1 to 48.7 - Smoke level high alarm values (0.0 – 99.9%)*

Option parameter 48.0 is only available if option 47.0 (smoke input select) is not set to zero.

If option 48.0 is set to 0, the smoke level high alarm is disabled.

If option 48.0 is set to 1, the smoke level high alarm is enabled and option parameters 48.1 to 48.7 become available.

Using option parameters 48.1 to 48.7, it is possible to set a different smoke level high alarm value for each profile combination. Each option parameter may be set to any value between 0 and 99.9% inclusive.

If the burner is firing, it is only possible to make an adjustment to the option parameter which relates to the selected profile combination. If the burner is not firing, the high alarm value for any profile combination may be adjusted.

If the smoke level exceeds the high alarm value for the selected profile combination, a fault number will appear. See section xxx for details of fault numbers.

Option 49.0 - NOx input select (0/1)*

Option 49.1 - NOx input zero value (0 – 999)*

Option 49.2 - NOx input span value (0 – 999)*

Option 49.0 is only available if a flue monitor interface (FMI) board is fitted in option slot 2, and the options are as follows:

0 - NOx sensor not fitted

1 - NOx sensor connected to 4-20mA NOx input (PM15-16).

If option 49.0 is set to 1, options 49.1 & 49.2 give the zero and span values for the input. There are the measured values that are displayed when 4mA and 20mA appear at the 4-20mA NOx input (PM15-16) on the FMI board.

Note: *The values entered for these option parameters are in units of x10 p.p.m, and therefore an entered value of 999 means 9990 p.p.m.*

Option 50.0 - NOx level high alarm select (0/1)*

Options 50.1 to 50.7 - NOx level high alarm values (0 - 999)*

Option parameter 50.0 is only available if option 49.0 (NOx input select) is not set to zero.

If option 50.0 is set to 0, the NOx level high alarm is disabled.

If option 50.0 is set to 1, the NOx level high alarm is enabled and option parameters 50.1 to 50.7 become available.

Using option parameters 50.1 to 50.7, it is possible to set a different NOx level high alarm value for each profile combination. Each option parameter may be set to any value between 0 and 999 inclusive, in units of x10 p.p.m. Remember that the NOx zero and span is entered in units of x10 p.p.m.

If the burner is firing, it is only possible to make an adjustment to the option parameter that relates to the selected profile combination. If the burner is not firing, the high alarm value for any profile combination may be adjusted.

If the NOx level exceeds the high alarm value for the selected profile combination, a fault number will appear. See xxx for details of fault numbers.

Option 51.0 - SOx input select (0/1)*

Option 51.1 - SOx input zero value (0 – 999)*

Option 51.2 - SOx input span value (0 – 999)*

Option 51.0 is only available if a flue monitor interface (FMI) board is fitted in option slot 2, and the options are as follows:

0 - SOx sensor not fitted

1 - SOx sensor connected to 4-20mA SOx input (PM17-18).

If option 51.0 is set to 1, options 51.1 & 51.2 give the zero and span values for the input. There are the measured values that are displayed when 4mA and 20mA appear at the 4-20mA SOx input (PM17-18) on the FMI board.

Note: *The values entered for these option parameters are in units of x10 p.p.m, and therefore an entered value of 999 means 9990 p.p.m.*

Option 52.0 - SOx level high alarm select (0/1)*

Options 52.1 to 52.7 - SOx level high alarm values (0 - 999)*

Option parameter 52.0 is only available if option 51.0 (SOx input select) is not set to zero.

If option 52.0 is set to 0, the SOx level high alarm is disabled.

If option 52.0 is set to 1, the SOx level high alarm is enabled and option parameters 52.1 to 52.7 become available.

Using option parameters 52.1 to 52.7, it is possible to set a different SOx level high alarm value for each profile combination. Each option parameter may be set to any value between 0 and 999 inclusive, in units of x10 p.p.m. Remember that the SOx zero and span is entered in units of x10 p.p.m.

If the burner is firing, it is only possible to make an adjustment to the option parameter which relates to the selected profile combination. If the burner is not firing, the high alarm value for any profile combination may be adjusted.

When the SOx level rises above the high alarm value for the selected profile combination, a fault number will appear. See section xxx for details of fault numbers.

Option 53.0 - Auxiliary input 1 (PM7-8) select (0/1)*

Option 54.0 - Auxiliary input 2 (PM5-6) select (0/1)*

These option parameters determine the functions of the AUX1 (PM7-8) & AUX2 (PM5-6) inputs on the FMI board. They are only available if an FMI board is installed in option slot 2.

Option 53.1 - Auxiliary input 1 (PM7-8) zero (0 – 999)*

Option 54.1 - Auxiliary input 2 (PM5-6) zero (0 – 999)*

These are the measured values that correspond to the minimum signal level (4mA) at the 4-20mA AUX1 (PM7-8) & AUX2 (PM5-6) inputs on the FMI board. They are only available if options 53.0 / 54.0 are not set to zero.

Option 53.2 - Auxiliary input 1 (PM7-8) span (0 – 999)*

Option 54.2 - Auxiliary input 2 (PM5-6) span (0 – 999)*

These are the measured values that correspond to the maximum signal level (20mA) at the 4-20mA AUX1 (PM7-8) & AUX2 (PM5-6) inputs on the FMI board. They are only available if options 53.0 / 54.0 are not set to zero.

Option 53.3 – Auxiliary input 1 (PM7-8) high alarm value (0 – 999)*

Option 54.3 – Auxiliary input 2 (PM5-6) high alarm value (0 – 999)*

If an auxiliary input exceeds these values, the a high alarm will be activated. See option parameters 16.1 – 16.3 for details of how to output these alarms to an external relay.

Options 58.0 to 61.2 - 4-20mA output functions *

These option parameters determine the function of each 4-20mA output on the boards installed in option slots 1 and 2. The table below details each option parameter.

OPTION PARAMETER	OUTPUT	DESCRIPTION
58.0	Opt. slot 1,Output 1	If the board installed in option slot 1 is an IDB, this option parameter relates to output terminals PH4-5
59.0	Opt. slot 1, Output 2	If the board installed in option slot 1 is an IDB, this option parameter relates to output terminals PH2-3
60.0	Opt. slot 2, Output 1	If the board installed in option slot 2 is an IDB, this option parameter relates to output terminals PL4-5 If the board installed in option slot 2 is an FMI, this option parameter relates to output terminals PM3-4
61.0	Opt. slot 2, Output 2	If the board installed in option slot 2 is an IDB, this option parameter relates to output terminals PL2-3 If the board installed in option slot 2 is an FMI, this option parameter relates to output terminals PM1-2

Depending on the values of option parameters 58.0, 59.0, 60.0 and 61.0 (see table above), it is possible to transmit one of the variables from the list below as a 4-20mA signal:

0 - No function. The output will transmit 0mA.

1 - Modulation rate (4mA when not modulating).

2 - Boiler pressure/temperature measured value.

3 - Boiler pressure/temperature setpoint

4 - Calculated efficiency.

5 - Inlet temperature.

6 - Flue temperature.

7 - Oxygen level.

8 - CO2 level.

9 - CO level

10 - Smoke level

11 - SOx level

12 - NOx level

13 - Modulation rate master signal for twin burner slaving. If the burner is modulating, the unit outputs a 4-20mA modulation rate signal. Otherwise, the unit out puts 0mA. The slave burner should have its auxiliary modulation input configured for remote tracking (see option parameter 03.3).

When output functions 2 to 12 are used, the output zero and span values must be entered. The option parameters determining zero and span values are detailed below:

Option parameter	Zero	Span
58.0	58.1	58.2
59.0	59.1	59.2
60.0	60.1	60.2
61.0	61.1	61.2

Note: *If an output on an IDB board is chosen, but the output is already configured for use with a inverter, the inverter function will take precedence.*

Option 70.0 - Erase enable (0/1)*

WARNING: If this value is displayed as a '2', the option parameter data has been 'uploaded' into the unit, ensure all option parameters are set to match the requirements of the burner to which it is connected. Failure to do so could cause a hazardous condition to occur.

After all option parameters have been checked to match the requirements of the burner to which it is connected, reset this option parameter to zero to allow the system to operate.

If an attempt is made to operate the system with this option parameter set to '2' a fault will be generated and the unit will perform a safety shutdown, preventing the burner from firing.

In order to erase information in memory for a specific profile selection (see option parameter 70.1), this option must be set to 1. Once the unit has left set-up mode, this parameter will automatically be reset to "0". If this option parameter is set to 2, see warning above.

Option 70.1 - Erase command (0 – 8)*

When erase enable (option 70.0) is set to "1", this option parameter determines which information will be erased when the unit leaves set-up mode.

0 - No erase.

1 - Erase profile 1 setpoints.

2 - Erase profile 2 setpoints.

3 - Erase profile 3 setpoints.

4 - Erase profile 4 setpoints.

5 - Erase profile 5 setpoints.

6 - Erase profile 6 setpoints.

7 - Erase profile 7 setpoints.

8 - Erase all setpoints and initialize all option parameters.

All setpoints with the exception of CLOSE SET will be erased for the specified profile combination of 1-7.

If 8 is selected, all setpoints inclusive of CLOSE SET will be erased and all option parameters will be set to default values. The unit will be initialized to the same state as when it was shipped. Since this operation takes some time to execute, a countdown will be given in run mode during the initialization process.

Option Parameter Selection of Profiles and Drives

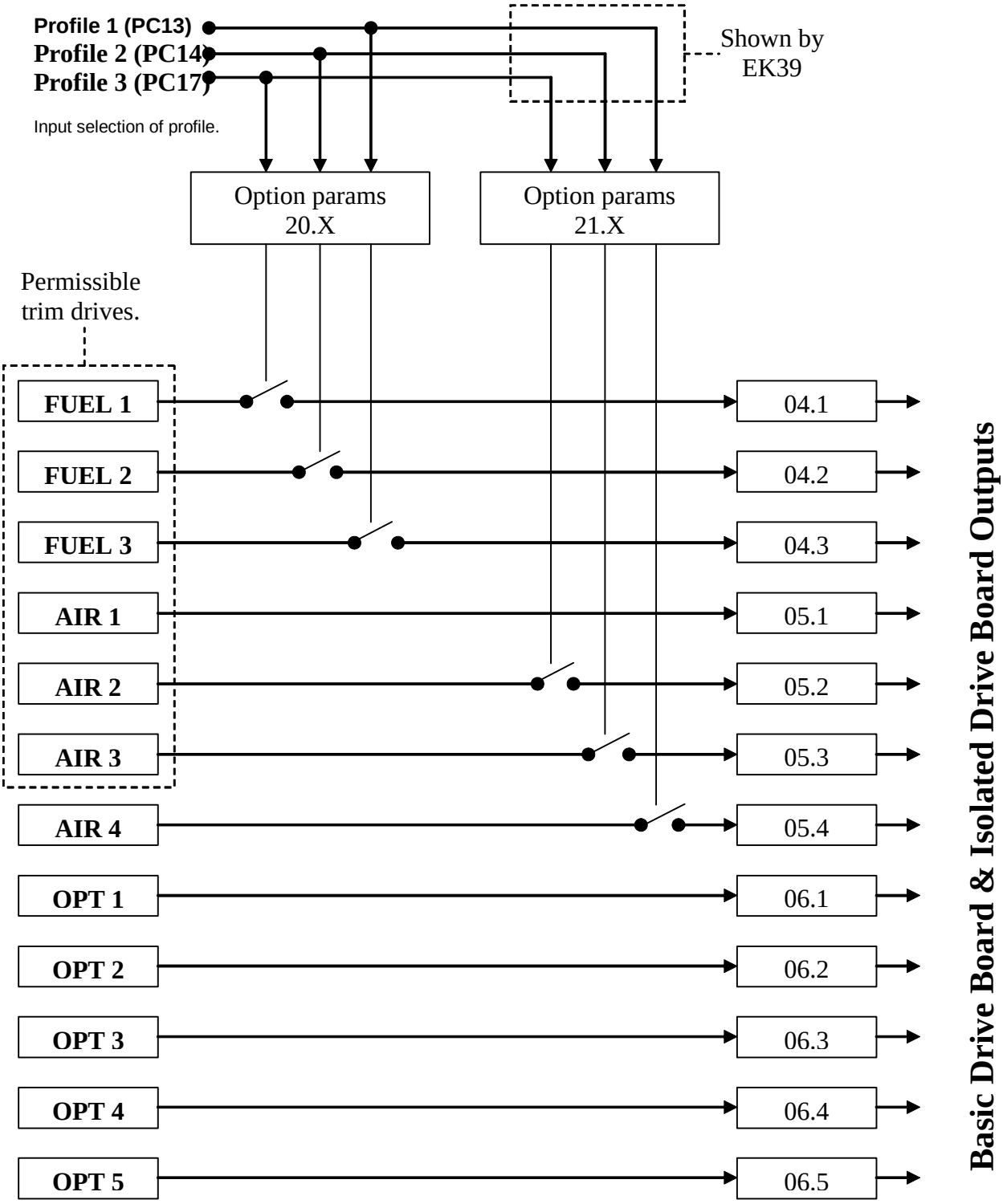

Derivation of Modulation Rate

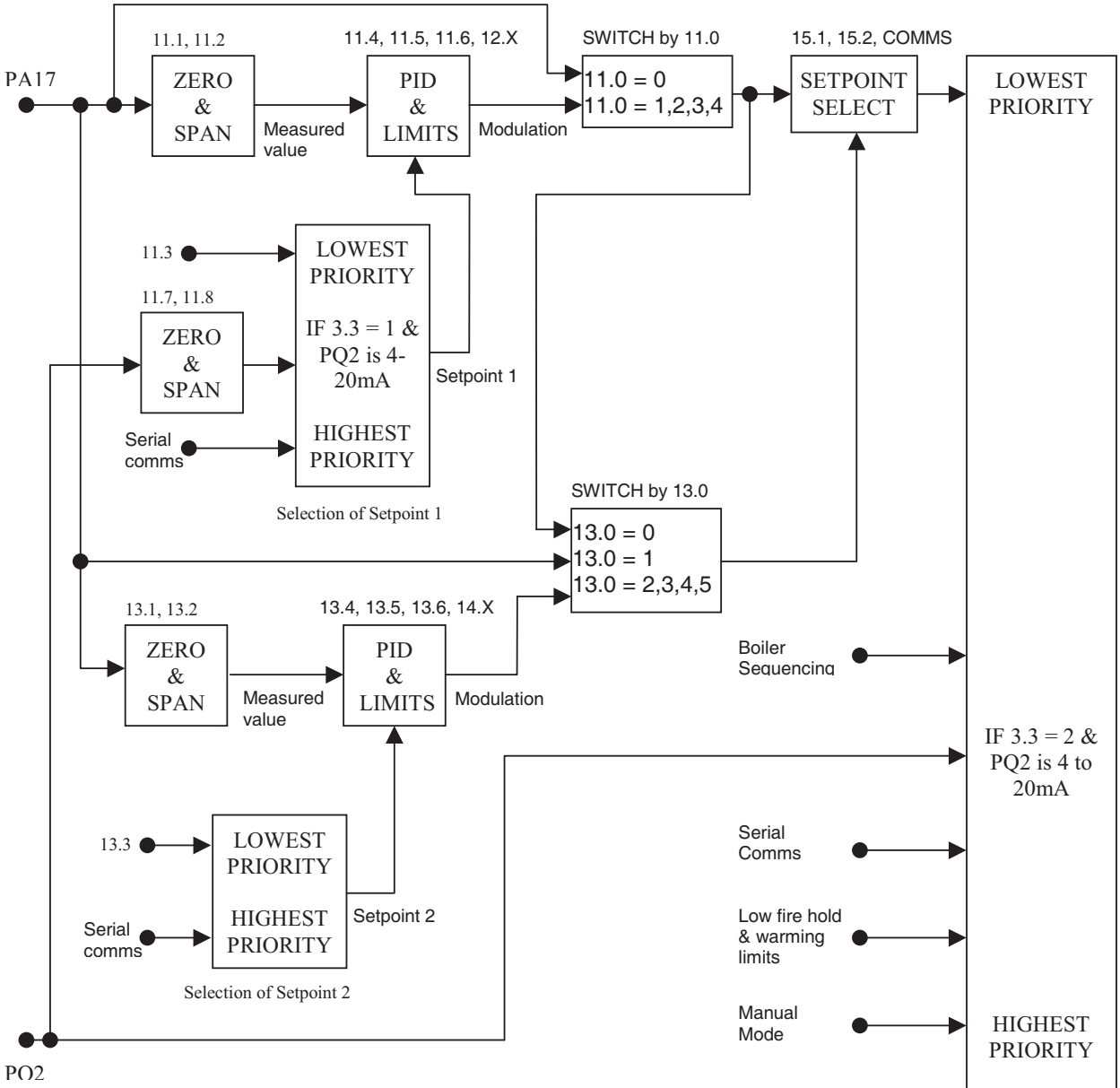

For a selection box (e.g. MOD. RATE SELECTION), the input which is valid / active with the highest priority (shown nearest the bottom) will be mapped to the output.

For example, a low fire hold signal will override a modulation command from serial communications, however if the unit is in manual mode, nothing will override the current modulation setting.

The fault display

The unit carries out a number of internal and external checks during operation. If a fault is found, a fault number is used to identify the type of problem. A list of fault numbers may be found later in this chapter.

Depending on the type of fault, the unit may perform a safety shutdown of the burner and/or activate the alarm relay (activation of the alarm relay is determined by option parameter 10.1).

Fault description

Many of the faults detected and displayed by the unit will cause a safety shutdown of the burner. Other faults will be displayed as a warning but operation of the burner will not be affected.

All fault numbers are prefixed by a letter. This letter describes the status of the fault:

F - This means that a fault has occurred (e.g. PSU calibration fault) and is still present. The fault may be internal or external to the unit.

L - This means that an alarm limit fault has occurred (e.g. smoke level exceeding the high limit) and is still present.

C - This means that a fault or alarm limit did occur but has now cleared.

For example:

F60 - Means fault 60 has occurred and still exists.

L75 - Means alarm limit 75 has been exceeded and is still being exceeded.

C73 - Means fault or alarm limit 73 has occurred but has subsequently cleared.

When the unit is in a safety shutdown state both the controlled shutdown triac and safety shutdown relay will be turned off, to prevent the burner from firing.

What to do if a fault occurs

To cancel the alarm relay, briefly press the **FAULT MUTE** key, if no display is connected, a separate **FAULT MUTE** switch will be available.

Use the scroll keys to view the **FAULT NUMBER** parameter and look up the fault number(s) shown to discover why the fault occurred.

If all faults that caused a safety shutdown have cleared, hold down the **FAULT MUTE** key for approximately three seconds to remove the faults and re-start the burner.

The function of the **FAULT MUTE** key may also be achieved using an AUX input.

Fault subsets

As an aid to fault finding, most faults have a fault subset that gives additional information about the type of fault or what the burner was doing when the fault occurred. Where applicable, the subsets are given in the fault listing section. Subsets are viewed using the engineer’s key within the Fireye logo.

Fault Listing

NUMBER	NAME	DESCRIPTION
F1	Fuel 1 incorrect position	A drive positioning fault has occurred, which will cause a safety shutdown of the burner. This fault has occurred for one of the following reasons: • During close position prove, when a drive stops at a position which is outside the close set position by more than five degrees. • During purge position prove, when a drive stops at a position which is outside the purge set position by more than five degrees. • During pre-purge, ignition or post-purge, when a drive moves from its setpoint. • During modulation, when a drive is not at its correct setpoint as defined by the commissioned fuel/air ratio for the selected profile. A drive is defined as having moved from its setpoint if its positional error is more than 1º for 15s, or more than 5º for 1s. For positional errors between 1º and 5º, the detection time is variable between 15s and 1s. Inverters have a different error tolerance during modulation. See option parameter 22.2 for details. Frequent positioning faults are usually caused by one of the following problems: • Worn, dirty or unsuitable (e.g. wire-wound) potentiometers used for servomotors feedback. • Unsuitable lead drive selection - two adjacent profile points having a small change in lead drive position, and a large change by a non-lead drive. Subset: burner status
F2	Fuel 2 incorrect position	
F3	Fuel 3 incorrect position	
F4	Option 1 drive incorrect position	
F5	Option 2 drive incorrect position	
F6	Option 3 drive incorrect position	
F7	Air damper 1 incorrect position	
F8	Air damper 2 incorrect position	
F9	Air damper 3 incorrect position	
F10	Air damper 4 incorrect position	
F11	Option 4 drive incorrect position	
F12	Option 5 drive incorrect position	
F13	Fuel 1 feedback failed	A drive feedback fault has occurred, which will cause a safety shutdown of the burner. This fault has occurred for one of the following reasons: • A potentiometric feedback signal from a servomotor is outside the range of 0-5v. • A 4-20mA feedback signal from a inverter drive is below 3.5mA, above 21.0mA or has an incorrect polarity. Subset: 1 – current below 3.5mA, 2 – current above 21mA or voltage above 5.3v
F14	Fuel 2 feedback failed	
F15	Fuel 3 feedback failed	
F16	Option 1 drive feedback failed	
F17	Option 2 drive feedback failed	
F18	Option 3 drive feedback failed	
F19	Air damper 1 feedback failed	
F20	Air damper 2 feedback failed	
F21	Air damper 3 feedback failed	
F22	Air damper 4 feedback failed	
F23	Option 4 drive feedback failed	
F24	Option 5 drive feedback failed	
F25	Fuel 1 illegal speed	The specified drive is outside the allowable speed range of 10s/90º to 60s/90º. If the drive is an inverter, adjust the acceleration and deceleration times accordingly. Before the pre-purge starts, all required drives are moved from their lowest positions (closed set points) to their highest positions (purge set points). During this time, a speed measurement, which is required for the modulation control algorithm, is made for each drive. If any drive is found to be outside the allowable speed range for reliable control, an incorrect speed fault occurs and the unit will be forced into a safety shutdown state. • Is the wiring correct? • Has the triac output failed? • Is the +5v / +15v potentiometer supply voltage selected correctly? Subset: 1 – Too fast, 2 – Too slow
F26	Fuel 2 illegal speed	
F27	Fuel 3 illegal speed	
F28	Option 1 drive illegal speed	
F29	Option 2 drive illegal speed	
F30	Option 3 drive illegal speed	
F31	Air damper 1 illegal speed	
F32	Air damper 2 illegal speed	
F33	Air damper 3 illegal speed	
F34	Air damper 4 illegal speed	
F35	Option drive 4 illegal speed	
F36	Option drive 5 illegal speed	
F39	PSU board voltage reference fault	The PSU board has an incorrect on-board voltage reference level. • Is the PSU board installed correctly? • Are any inputs to the PSU board outside their specified limits? For example, is the modulation input (PA17) at more than 5V or less than 0V?

NUMBER	NAME	DESCRIPTION
F40	Basic drive board potentiometer supply fault	The unit has detected that the supply to the potentiometers on the basic drive board is too high or too low. • Is the basic drive board installed correctly? • Is the potentiometer supply voltage selection link on the basic drive board installed? • Are the potentiometers wired correctly?
F41	Burner interface board input fault	*The unit has detected a fault with the mains inputs on the burner interface board.* *• Is the burner interface board installed correctly?* *• Are inputs in the range 0 – 30v (OFF) and 93 – 264v (ON) RMS?* *• Is the wiring to the burner interface board correct?* *• Are the links on the PSU board set for the correct mains supply voltage?* *• Is PC19 (NEUTRAL) connected only to PA4 (NEUTRAL SUPPLY)?* *• Are the inputs to the burner interface board on the same mains phase as the main power supply?* *• Is the mains supply excessively noisy?* *Subset: Which input.* *1 – down, 2 – up, 3 – auto/man, 4 – hi/low, 5 – burner on,* *6 – fuel 1, 7 – fuel 2, 8 – aux. 1, 9 – ox 2, 10 – fuel 3*
F43 F44	Isolated drive board in option slot 1 potentiometer supply fault Isolated drive board in option slot 2 potentiometer supply fault	The unit has detected that the supply to the potentiometers on an isolated drive board is too high or too low. • Is the isolated drive board installed correctly? • Are the potentiometer supply voltage selection links on the isolated drive board installed? • Are the potentiometers wired correctly? Subset: +1 – channel 0, +2 – channel 1, +4 – wrong high voltage / low voltage
F45	Option slot 1 board not recognized	The option board installed in option slot 1 is not recognized by the unit. • Is the option board installed correctly?
F46	Option slot 2 board not recognized	The option board installed in option slot 2 is not recognized by the unit. • Is the option board installed correctly?
F47	Option slot 1 voltage reference fault	The board installed in option slot 1 has an incorrect on-board reference level. • Is the option board installed correctly? Subset: +1 – channel 0, +2 – channel 1
F48	Option slot 2 voltage reference fault	The board installed in option slot 2 has an incorrect on-board reference level. • Is the option board installed correctly? Subset: +1 – channel 0, +2 – channel 1
F50	Commissioning data checksum fault	The commissioning data memory on the CPU board has been corrupted. • Use option parameter 70.0 to erase all option parameters and fuel/air ratio set points. • Contact supplier. Subset: faulty page
F51	RAM test fault	The main memory on the CPU board has malfunctioned. • Contact supplier.
F52	Program memory checksum fault	The program memory on the CPU board has been corrupted. • Contact supplier.
F53	Register test fault	The CPU has malfunctioned. • Contact supplier.
F54	Microprocessor clock fault	The timing reference on the CPU board is incorrect. • Are the links on the PSU board selected for the correct mains supply voltage? • Is option parameter 1.1 set for the correct mains frequency? • Is the on-site mains frequency incorrect? • Use a filtered UPS power supply if the mains supply is excessively noisy. Subset: expected mains frequency
F55	PSU calibration fault	The calibration data on the PSU board could not be read, or is corrupted. The unit will not perform a safety shutdown but instead will use default calibration values. This means that the modulation and RT inputs on the power supply board may not be accurate. • Is the PSU board installed correctly? • Contact supplier.

NUMBER	NAME	DESCRIPTION
F56	Burner on fault	PC12 did not go low when the controlled shutdown triac (PC3-4) switched off. • Is the burner I/O board installed correctly? • Is the wiring between the burner I/O board and burner controller correct? Subset: burner status
F57	Purge prove fault	The purge prove terminals have not got a feed during purge, or the terminals have been shorted out. • Is the burner I/O board installed correctly? • Is the wiring between the burner I/O board and the burner controller correct? Subset: burner status
F58	Ignition prove fault	The ignition prove terminals have not got a feed during ignition, or the terminals have been shorted out. • Is the burner I/O board installed correctly? • Is the wiring between the burner I/O board and the burner controller correct? Subset: burner status
F60	Not enough setpoints entered	A fuel/air ratio profile has been selected which does not have at least P3 commissioned. Use commission ratio mode to enter extra set points. Subset: selected profile
F61	Drive mapping fault	Two drives have been mapped to the same output. See options 04.1 to 06.5. • Are the drive mapping option parameters set correctly? Subset: drive number
F62	Output not present	A drive has been mapped to an output that does not exist. • Are the drive mapping option parameters (04.1 – 06.5) set correctly? • Are the profile mapping parameters correct (options 20.X)? • Are the correct boards installed? • Are the air drive select parameters (options 21.X) correct? Subset: drive number
F63	Lead drive not present	A lead drive value has been entered (option 07.X) which does not exist. • Are the lead drive option parameters set correctly? • Are the correct boards installed? Subset: lead drive
F64	Drive not mapped	A fuel/air ratio has been selected which has one or more un-mapped drives. • Are the drive mapping option parameters (04.1 – 06.5) set correctly? • Erase the profile and re-commission. Subset: drive number
F65	Software control word fault	An internal software fault has occurred. • Disconnect and then reconnect power to the unit. Contact supplier
F66	Option parameters upload fault	A set of option parameters has been uploaded via serial communications, but has not been verified by the engineer. • After ensuring all option parameters are as required, set option parameter 70.0 to 0 to clear this fault.
F70	Oxygen probe heater fault	The probe has not heated to the correct temperature within 15 minutes of system power up. • Is the probe heater wiring correct? • Is the probe transformer wiring correct? • If the probe cell thermocouple wiring correct? Subset: O2 probe status
F71	Probe calibration fault	The probe calibration data is invalid. • Enter the calibration data supplied with the probe. • Calibrate the probe using air and reference gas.
L72	Oxygen low limit alarm	The oxygen level measured value is below the oxygen setpoint low alarm value for the current profile.
L73	Oxygen high limit alarm	The oxygen level measured value has exceeded the oxygen setpoint high alarm value for the current profile.
F74	Trim drive not allowed	One of the trim drives has been specified as the same as the lead drive. • Are option parameters 7.X set for the same drive as option parameters 32.X?
L75	Trim limit alarm	The trim drive has reached the allowed maximum deviation limit. • Change trim limit. • Re-commission fuel / air ratio.

NUMBER	NAME	DESCRIPTION
F76	Oxygen probe purge check	The measured value from the oxygen probe was less than 18.0% at the end of pre-purge. Trim is disabled. Subset: Oxygen level x 10
F77	Auto trim commissioning fault	The measured oxygen level exceeded 15.0% during auto trim commissioning. The burner is shutdown. Subset: Last auto trim commission setpoint
L78	Flue temperature low alarm value exceeded	The measured flue temperature is below the low alarm value for the current profile, or the flue thermocouple is faulty.
L79	Flue temperature high alarm value exceeded	The measured flue temperature has exceeded the high alarm value for the current profile.
L80	CO high alarm value exceeded	The measured CO level has exceeded the high alarm value for the current profile, or the CO feedback signal is outside the range 4-20mA.
L81	Smoke high alarm value exceeded	The measured smoke level has exceeded the high alarm value for the current profile, or the smoke feedback signal is outside 4-20mA.
L82	NOx high alarm value exceeded	The measured NOx level has exceeded the high alarm value for the current profile, or the NOx feedback signal is outside 4-20mA.
L83	SOx high alarm value exceeded	The measured SOx level has exceeded the high alarm value for the current profile, or the SOx feedback signal is outside 4-20mA.
F91	Option board 1 calibration fault	The calibration data on the board installed in option slot 1 has become corrupted. If the fault persists for 23 hours, the burner will shutdown. • Is the board in option slot 1 installed correctly? • Contact supplier.
F92	Option board 2 calibration fault	The calibration data on the board installed in option slot 2 has become corrupted. If the fault persists for 23 hours, the burner will shutdown. • Is the board in option slot 2 installed correctly? • Contact supplier.
F93	Safety shutdown relay fault	A fault has occurred with the safety shutdown relay. If the fault persists for 23 hours, the burner will shutdown. • Is the burner I/O board installed correctly? • Is the wiring to the burner I/O board correct? • Is a live feed connected to PC1 when the unit receives a burner on signal on PC12. • Is the mains phase correct?
F94	Program memory secondary checksum fault	A fault has occurred with the program memory on the CPU board. If the fault persists for 23 hours, the burner will shutdown. •Contact supplier
F95	Watchdog secondary fault	A fault has occurred with the watchdog circuit on the CPU board. If the fault persists for 23 hours, the burner will shutdown. • Contact supplier

The Engineer's Key

The engineer's key is a hidden key that is located under the Fireye logo in the top left hand corner of the display. With the use of the engineer's key it is possible to read the values of internal system variables and external input and output states. It is also possible to see the values of fault subsets (refer to section 9.4 for details), in order to obtain more detailed information about a fault which has occurred.

When using the engineer's key it is not possible to change any parameters. Therefore, it is not possible to affect the operation of the burner.

Viewing engineer's key parameters

After pressing the engineer's key:

- The display will show the number of the currently selected parameter and value.

Use the scroll keys to change the parameter number shown on the top left display.

Press the RUN key at any time to revert to the normal run display.

The unit will revert automatically to the normal run display if a key has not been pressed for one minute.

When using the engineer's key it is not possible to change any parameters. Therefore it is not possible to affect the operation of the burner.

Engineer's Key Parameter List

NUMBER	NAME	DESCRIPTION
EK1	PC8 (DOWN) input	Shows the state of each input. Where: 0 = OFF 1 = ON
EK2	PC9 (UP) input	
EK3	PC10 (HAND/AUTO) input	
EK4	PC11 (HI/LO INIT) input	
EK5	PC12 (BURNER ON) input	
EK6	C13 (PROFILE 1) input	
EK7	C14 (PROFILE 2) input	
EK8	C15 (AUX 1) input	
EK9	PC16 (AUX 2) input	
EK10	PC 17 (PROFILE 3) input	
EK11	PC5 (COMMON PROVE) output	Shows the state of each output. Where: 0 = OFF, 1 = ON
EK12	PC6 (IGNITION PROVE) output	
EK13	PC7 (PURGE PROVE) output	
EK14	Boiler status	0 - Burner will not fire because the temperature/pressure measured value has exceeded the high control value 1 - Burner will fire because the temperature/pressure measured value has fallen below the low control value
EK15	Confirm to adjust	0 - Unit not in commission mode or drives moving to setpoints 1 - Unit in commissioning mode and drives may be individually adjusted using the UP/DOWN keys
EK16	Drive moved	0 - Unit not in commissioning mode or drive not moved using the UP/DOWN keys 1 - Unit in commissioning mode and drive has been moved using the UP/DOWN keys
EK17	Positions proved	0 - Drives have stopped moving, ready for position prove test 1 - Ready for position prove test, but drives have not stopped moving
EK18	Fault alarm	0 - Fault alarm off 1 - Fault alarm on
EK19	Setpoint low alarm	0 - Setpoint low alarm off 1 - Setpoint low alarm on. The temperature/pressure measured value has fallen below the setpoint low alarm value
EK20	Setpoint high alarm	0 - Setpoint high alarm off 1 - Setpoint high alarm on. The temperature/pressure measured value has risen above the setpoint high alarm value
EK21	Warming limit	0 – Measured value above warming limit 1 – Measured value below warming limit, burner at low fire.
EK22	PID function enabled	0 - PID function not selected or not being calculated 1 - PID function selected and being calculated
EK23	Auxiliary input 1 high alarm	0 – Aux input 1 high alarm off 1 – Aux input 1 high alarm on. The auxiliary input 1 value has risen above the high limit (see option parameters 53.X)
EK24	Auxiliary input 2 high alarm	0 – Aux input 2 high alarm off 1 – Aux input 2 high alarm on. The auxiliary input 2 value has risen above the high limit (see option params. 54.X)
EK25	O2 trim operative	0 - O2 trim disabled or inoperative 1 - O2 trim enabled and operative
EK26	Track modulation input	0 – Not tracking PQ input. 1 – Tracking PQ input.
EK27	Setpoint selected (1 / 2)	0 – Setpoint 1 is selected 1 – Setpoint 2 is selected
EK33	Basic drive board type	Where: 0 - No board fitted 1 - Basic drive board fitted with 5V potentiometer supply 2 - Basic drive board fitted with 15V potentiometer supply

NUMBER	NAME	DESCRIPTION
EK34	Option 1 board type	Where: 0 - No board fitted 1 - Isolated drive board (IDB) 2 - Flue gas monitoring board (FMI) 6 - Board not recognized
EK35	Option 2 board type	
EK38	Burner status	Shows what state the burner is in. Where: 0 - Initialization 1 - Initialization 2 - Safety shutdown 3 - Controlled shutdown triac OFF 4 - Waiting for fuel, burner on and high/low initiate signals 5 - Prove closed positions 6 - Prove purge positions 7 - Close fuel drives 8 - Purge prove triac ON 9 - Move drives to ignition position 10 - Ignition prove triac ON 11 - Move drives to low fire 12 - Modulate drives to demand 13 - Move to post purge 14 - Post purge
EK39	Profile selection	Currently selected profile (on PC13,14 and 17), where: 0 - No profile selected 1 to 7 - Profile 1 to 7 selected
EK40	Setpoints entered	The number of setpoints entered for the currently selected profile, where 0 - No setpoints entered 1 - Close setpoint only 2 - Close and purge setpoints 3 - Close, purge and ignition 4 - Close, purge, ignition and 1 profile point 5 - As 4, with 2 profile points 6.24 - Continued as above
EK41	Commission status	Determines the current commissioning mode, where: 0 - Run mode 1 - Adjust ratio mode 2 – Commission ratio mode
EK42	Commission profile selected	The expected commission ratio profile 0 – Any profile 1 to 7 – Number of profile
EK43	Commission setpoints entered	The number of setpoints entered in the current commission ratio session (see parameter 40 for detailed description)
EK44	Commission ratio setpoint	The current commission ratio setpoint, where: 0 - Closed setpoint 1 - Purge setpoint 2 - Ignition setpoint 3 - Profile 1 setpoint 4 - Profile 2 setpoint 5.24 - Profile 3.20 setpoints 255 - Setpoint not adjustable
EK45	Modulation mode	The current modulation mode, where: 0 - Auto mode 1 - Manual from external input 2 - Hand from keyboard 3 - Boiler sequencing control 4 - Low fire hold
EK46	Adjust ratio setpoint	The setpoint to be altered in adjust ratio mode (see parameter 44 for details)
EK47	Potentiometer supply option board 1 * IDB MUST BE INSTALLED	+1 - Motor 1 5V supply +2 - Motor 1 15V supply

NUMBER	NAME	DESCRIPTION
EK48	Potentiometer supply option board 2 * IDB MUST BE INSTALLED	+16 - Motor 2 5V supply +32 - Motor 2 15V supply
EK50	Enclosure temperature (ºC) * FMI MUST BE INSTALLED	Unit's internal temperature
EK51	O2 probe heater power output * FMI MUST BE INSTALLED	Power output to the probe heater (0-100%)
EK52	O2 probe status * FMI MUST BE INSTALLED	+1 - Offset fault +2 - Gain fault +4 - Heater fault +8 - Cell mv too high +16 - Oxygen level <18% during pre-purge
EK53	O2 trim status	0 - O2 trim working, or +1 - FMI not fitted +2 - Option 30.0 not 1, or option 30.5 not 1, or option 30.8 not 0 or trim not selected via aux input or trim not selected via serial comms +4 - O2 set points or flow values incorrect +8 - Option 30.6 not 0 +16- Not modulating +32- In commission mode +64- Probe faulty (see EK52) +128- Lead drive same as trim drive.
EK54	Modulation rate	The current percentage modulation rate, where 0 - Low fire 100 - High fire
EK55	Nearest setpoint to lead	The number of the profile setpoint which is nearest to the current lead drive position.
EK56	Shutdown Setpoint	The value of EK55 when the last shutdown occurred.
EK60	Adjust ratio entry	Number of times adjust ratio mode has been entered since performing a full memory erase.
EK61	Commission ratio entry	Number of times commission ratio mode has been entered since performing a full memory erase.
EK75	Drives at setpoint	Represents which drives are currently at their set points, where: 0 - All drives are at their set points and are not moving NON-ZERO - One or more drives are not at or are unable to get to their set points
EK76	Instantaneous fuel flow	Calculated fuel flow for currently selected profile. This is only available on single fuel profiles which have all flow values entered.
EK77	AUX 1 Input value	Scaled value of 4 - 20mA input on AUX1 terminal of FMI board (PM7-8).
EK78	AUX 2 Input value	Scaled value of 4 - 20mA input on AUX2 terminal of FMI board (PM5-6).
EK79	Boiler sequencing status	0 – Boiler sequencing inactive 1 – Boiler held off via sequence control 2 – Boiler in standby via sequence control 3 – Boiler modulating via sequence control 4 – Boiler is lead via sequence control
EK80	Basic drive board feedback value	Used to identify the type of basic drive board fitted and the supply voltage to the feedback potentiometers
EK81	PSU reference error (V)	The difference between the calibrated and the measured voltage reference values on the PSU board F39 will be generated if this value <-0.13 or >0.13
EK82	Serial communications status	+1 – Toggle on message received +2 – Serial communications passcode correct, or in commission ratio mode +4 – Boiler sequencing passcode correct
EK83	CPU board serial no. (low 3 digits)	The 6 digit CPU board serial number.
EK84	CPU board serial no. (high 3 digits)	This serial number is required to obtain the boiler sequencing and/or serial data communications pass codes.

NUMBER	NAME	DESCRIPTION
EK85	Oxygen probe cell temperature (ºC)	Temperature of oxygen cell, nominal 650ºC. F70 will be generated if outside the window 600ºC (after 15 minutes of power on) to 700ºC
EK86	Oxygen error (%)	Error between O2 measured value and O2 setpoint
EK87	Trim deviation (% flow)	Deviation in air flow imposed by trim (-25 to +25%)
EK88	Excess air (%)	Excess combustion air at the current firing position
EK89	Oxygen setpoint (%)	Current oxygen setpoint. This is only available if trim is enabled and working.
EK90-101	Fuel 1 - Option 5 positioning error (º for motors, 0 – 999 for inverters)	How far a drive is away from its setpoint A positioning fault will be generated if the error is greater than 1º for 15 seconds or 5º for 1 second.
EK102-113	Drive speed (s/90×)	The measured time taken for each motor to move over 90×.

Troubleshooting

Display

WARNING: Use extreme care while testing the system. Line voltage is present on most terminal connections when power is on.

Disconnect the power supply before beginning to fault find to prevent electrical shock, equipment and control damage. More than one power supply disconnect may be involved.

PROBLEM	POSSIBLE CAUSE	SUGGESTED ACTION
Display will not light Display shows garbage. Keys do not work.	Display wired incorrectly.	Check wiring to connector PA. Check that the links on the PSU board have been set for the correct voltage supply.
Display will not light.	Fuse blown on PSU board.	Check fuse. If blown, investigate all external wiring and replace fuse with a new one of the correct type and rating.
Drive positions incorrect.	Wrong potentiometer voltage. Incorrect potentiometer wiring.	Check POT SUPP link (see 1.6.4). Check wiring to terminals PD & PG.
Measured value incorrect.	Wrong sensor voltage. Wrong sensor input type. Incorrect sensor wiring. Wrong zero or span. Setpoint 1/2 incorrectly selected Has option parameter 3.2 been set correctly?	Check that the +5/+20V links on the PSU board been set correctly. Check the I/V link on the PSU is correct. Check option 03.2 matches Check wiring to terminals PA16 - 20. Check option parameters 11.1, 11.2, 13.1, 13.2. Check EK 27 and select other setpoint.
Setpoint incorrect.	Setpoint 1/2 incorrectly selected Option params 11.3/13.3 incorrect. Value updated via serial comms	Check EK 27 and select other setpoint. Enter option set mode and change values. Change setpoint using ComFire software.
Hours run shows"---". Hours run keeps toggling.	No profile selected. Hours run > 999 hours.	Select oil or gas profile. 1st digits show thousands, 2nd show units.
Modulation rate is 0.	Burner not modulating.	Wait for burner to finish startup sequence.
Burner status is flashing.	Unit in safety shutdown mode.	Burner status before shutdown displayed.
Display flickers at ignition	Poor grounding/shielding	

Startup

PROBLEM	POSSIBLE CAUSE	SUGGESTED ACTION
Burner will not start.	Unit in safety shutdown. No fuel selected. Burner not selected. High control limit exceeded. Unit in commission ratio mode. Burner off via serial comms. Burner controller lockout	Hold FAULT MUTE key when faults clear. Check EK6 (profile 1 input), EK7 (profile 2) & EK10 (profile 4). Check EK5 (burner select input). Check EK14 and wait for press/temp to drop. Press NEXT to advance to next setpoint. Turn burner on using ComFire software. Check burner controller inputs (PC1-4)
Drive positioning fault occurs before drives move to purge.	Stored close positions do not match actual close positions.	Check feedback potentiometers (by moving them over the full range and checking that the feedback displayed changes smoothly and always in the right direction) and motor micro-switches. Reset close positions using commission ratio
Drive positioning fault occurs when drives reach purge.	Stored purge positions do not match actual purge positions.	Check feedback potentiometers (by moving them over the full range and checking that the feedback displayed changes smoothly and always in the right direction) and motor micro-switches. Reset purge positions using commission ratio
Drives stuck at ignition and burner has not fired.	Drives cannot reach ignit. pos. Unit not released to ignite. Unit in commission mode.	Check motor micro-switches and linkages. See options 15.1 / 15.2 and inputs PC15 / PC16 Hold 'NEXT' key for 3 seconds to ignite.

Commissioning

PROBLEM	POSSIBLE CAUSE	SUGGESTED ACTION
Cannot get past P0.	Unit in safety shutdown. No fuel selected. Burner not selected. High control limit exceeded. Unit in commission ratio mode. Burner off via serial comms.	Hold FAULT MUTE key when faults clear. Check EK6 (profile 1 input), EK7 (profile 2) & EK10 (profile 4). Check EK5 (burner select input). Check EK14 and wait for press/temp to drop. Press NEXT to advance to next setpoint. Turn burner on using ComFire software.
"Px" or "Ax" display flashes constantly and motor positions cannot be altered.	Drives moving to position. Burner off in adjust ratio mode. A0, A1, A2 displayed. Two adjacent lead drive set points similar (burner on, adjust ratio mode).	Wait for drives to reach position. Fire burner to alter points in adj. ratio mode. Use commission ratio mode to alter these. The lower setpoint should be assessable (AX stops flashing) - the lead drive position at this point must then be reduced slightly.
"Px" or "Ax" display does not flash and motor positions cannot be altered.	Incorrect motor selected. No feed on MOTOR COM. Motor microswitch open.	Use the top quadrant keys to select a motor. Check for feed on terminal PE1 / PF2. Adjust motor micro switch.
Motors appear to move too quickly.	+15V potentiometer supply incorrectly selected.	Change the link on the basic drive board to select a +5V potentiometer supply.
Motor feedback will only go up to approx 35°.	+5V potentiometer supply incorrectly selected.	Change the link on the basic drive board to select a +15V potentiometer supply.
Option parameter not available.\	Another option parameter must be set first.	Set option parameter (usually XX.0) to a non-zero value to enable other params. in group.
Option parameter not adjustable.	Wrong passcode entered or burner firing.	Enter the supplier passcode and/or turn the burner off before changing the value.
Not possible to enter commission ratio mode.	Supplier passcode incorrect. Burner firing.	Enter correct passcode. Turn burner off.
Not possible to enter adjust ratio mode.	Supplier passcode or adjust ratio passcode incorrect.	Enter supplier passcode with the burner on OR adjust ratio passcode with the burner on or off.

Modulation

PROBLEM	POSSIBLE CAUSE	SUGGESTED ACTION
Sensor or modulation rate inaccurate.	V/I input setting incorrect. 5/24V supply setting incorrect.	Check option parameter 03.2 and PSU links. Check PSU links.
Intermittent positioning faults.	Lead drive setting incorrect. Profile not suitable. Profile too close to micro-switch. Poor Earth or shielding. Feedback potentiometer faulty.	Change lead drive (option 07.0 – 07.7). Increase motor range (by adjusting linkages). Move end points further away from high/low. Check wiring. Move motors over the full range and check that the feedback displayed changes smoothly and always in the right direction.
Modulation rate sticks at a profile setpoint.	Lead drive position similar or same as adjacent setpoint.	Enter commission ratio mode and change the lead drive setpoints or change lead drive.
Unit stuck at low fire.	Meas. value exceeds setpoint. Low fire hold time not expired. Warming limit active (EK21=1). Unit in manual. External low fire hold. Sequencing low fire hold. Unit not released to modulate	No fault. Wait for low fire hold time to expire. Wait for boiler to warm up. Press the AUTO key to change to auto mode Remove feed from PC8 and PC10. Increase the mod. rate in manual mode. See options 15.1 / 15.2 and inputs PC15 / PC16

PROBLEM	POSSIBLE CAUSE	SUGGESTED ACTION
Unit stuck at modulation rate.	Serial communications. Unit in commission mode.	Disable release to modulate button, or change modulation rate slider in ComFire. Press RUN then ENTER to enter run mode.
Drives are "stuck" in purge position when burner is turned off.	Has post purge been selected?	Check option parameter 9.1
Post purge does not occur.	Has post purge been selected? Is the unit in safety shutdown mode?	Check that option parameter 9.1 is non-zero. No post purge in safety shutdown.

Technical Specifications

Supply voltage	110/120/220/240 Vac
Power consumption	Approx. 20VA
Supply frequency	50/60 Hz
Temperature range	0 to 60°C
Control unit protection category and mounting position	IP20 – The unit must be situated in a clean environment Indoor: must be mounted in an IP40 enclosure. Outdoor: must be mounted in an IP54 enclosure.
Control unit dimensions:	220 x 144, 140mm tall (8.7 x 5.7, 5.5in tall)
Control unit weight:	5.7 kg
Type of display:	2 line 20 character dot-matrix vacuum fluorescent
Maximum number of fuels:	3
Maximum number of air drives:	9
Maximum number of inverters:	4
Maximum number of profiles:	7
Maximum number of setpoints per profile	24 including close, purge and ignition
Positioning accuracy:	0.1º
Possible option configurations1	(1 x IDB + 1 x FMI) or (2 x IDB)
Basic motor drive board (standard)	
Maximum number of servo-motors:	4
Maximum motor current: (high voltage pcb)	150mA RMS
Maximum motor voltage: (high voltage pcb)	250Vac
Maximum motor current (low voltage pcb)	750mA RMS
Maximum motor voltage (low voltage pcb)	50Vac.
Potentiometer feedback voltage:	.+5V D.C. for pot with full range travel, +15V D.C. for 340º pot with 90º travel.
Potentiometer resistance4	(set by jumper on PCB) 1 to 5K ohms @ 5V 3 to 15K ohms @ 15V
Burner interface board (standard)	
Alarm relay output:	Single pole changeover, max 2A @ 250Vac RMS (Pilot duty)
Safety shutdown relay:	De-energize for off, max. 2A @ 250Vac RMS (Pilot duty) Min 110Vac RMS
Controlled shutdown, ignition & purge triacs:	Max. 0.5A @ 250Vac RMS
Digital inputs (10):	Max. 1.5mA @ 250Vac,
Digital outputs (3):	Max. 15mA @ 12Vdc.
RS485:	2 - wire with ground, termination resistor selected using a link.

RS232 & RS485:	FIREYE specific protocol. See NEX-1501 (FIREYE serial communications protocol manual) for details.

Power supply and boiler I/O board (standard)

RTD input:	3 wire, 0 to 350ºC
Pressure/temp input (0 – 5V):	less than 2mA, ±15V max.
(4 – 20mA)	220W burden, ±50mA max.
	Accuracy ±2% full scale.
Operator station interface:	FIREYE specific

Isolated drive board (optional)

Maximum number of servo-motors:	2
Maximum motor current: (high voltage pcb)	150mA RMS
Maximum motor voltage: (high voltage pcb)	250Vac
Maximum motor current: (low voltage pcb)	750mA RMS
Maximum motor voltage: (low voltage pcb)	50Vac
Potentiometer feedback voltage:	+5V D.C. for pot with full range travel,
	+15V D.C. for 340º pot with 90º travel.
Potentiometer resistance2	(set by jumper on PCB)
	1 to 5K ohms @ 5V
	3 to 15K ohms @ 15V
Number of isolated 4-20mA current outputs:	2
Maximum loop resistance:	750 ohms
Isolation voltage:	50v
Number of isolated 4-20mA current inputs:	2
Input impedance:	220 ohms
Isolation voltage:	50v

Flue monitor interface board (optional)

Interface to oxygen probe:	FIREYE specific
Inlet temperature input:	2-wire R.T.D.
Flue temperature input:	Type K thermocouple
Calibration gas solenoid output:	1A @ 24Vac
Number of isolated 4-20mA current outputs:	2
Maximum loop resistance:	750 ohms
Isolation voltage:	50v (not isolated from each other)
Number of isolated 4-20mA current inputs:	6
Input impedance:	220 ohms
Isolation voltage:	50v (not isolated from each other)

Oxygen probe kit

The oxygen probe kit (series PPC5000) AH221245 consists of:

1 x NX280PK Oxygen probe

1 x Mounting flange kit

1 x Ambient air temperature sensor

1 x Probe heater transformer

Nexus PPC5000 Fuel Air Ratio Control System Commissioning sheet

General and Drive Positions

Site:	
Serial No.	Boiler No;
Fuel:	Date

Engineer:
Comments

Profile:	Drive Position (°)								
Setpoint	Drive:	Drive:	Drive:	Drive:	Drive:	Drive:	Measured Oxygen (%)	Flow Value (%)	Oxygen Setpoint (%)
PO (close)							-	-	-
P1 (purge)							-	-	-
P2 (ignition)								-	-
P3									
P4									
P5									
P6									
P7									
P8									
P9									
P10									
P11									
P12									
P13									
P14									
P15									
P16									
P17									
P18									
P19									
P20									
P21									
P22									
P23									

Option Parameters

Note: Not all parameters are always available.

	XX.0	XX.1	XX.2	XX.3	XX.4	XX.5	XX.6	XX.7	XX.8	XX.9
00.X	■		■	■	■			■	■	■
01.X	■			■	■	■	■	■	■	■
02.X	■			■	■			■	■	■
03.X	■				■			■		■
04.X	■				■	■	■	■	■	■
05.X	■					■	■	■	■	■
06.X							■	■	■	■
07.X									■	■
08.X	■			■	■	■	■	■	■	■
09.X	■		■	■	■	■	■	■	■	■
10.X	■		■	■	■	■	■	■	■	■
11.X										■
12.X							■	■	■	■
13.X								■	■	■
14.X							■	■	■	■
15.X	■			■	■	■	■	■	■	■
16.X	■				■	■	■	■	■	■
20.X									■	■
21.X									■	■
22.X	■					■	■	■	■	■
25.X									■	■
30.X										
32.X									■	■
33.X									■	■
34.X									■	■
35.X									■	■
36.X									■	■
37.X									■	■
38.X	■								■	■
39.X									■	■
40.X	■								■	■
41.X	■								■	■
42.X	■								■	■
43.X					■	■	■	■	■	■
45.X				■	■	■	■	■	■	■
46.X									■	■
47.X				■	■	■	■	■	■	■
48.X									■	■
49.X				■	■	■	■	■	■	■
50.X									■	■
51.X				■	■	■	■	■	■	■
52.X									■	■
53.X					■	■	■	■	■	■
54.X					■	■	■	■	■	■
58X				■	■	■	■	■	■	■
59.X				■	■	■	■	■	■	■
60.X				■	■	■	■	■	■	■
61.X				■	■	■	■	■	■	■

Distribution Board Connections

AH221250 (For use with 2 x IDB)

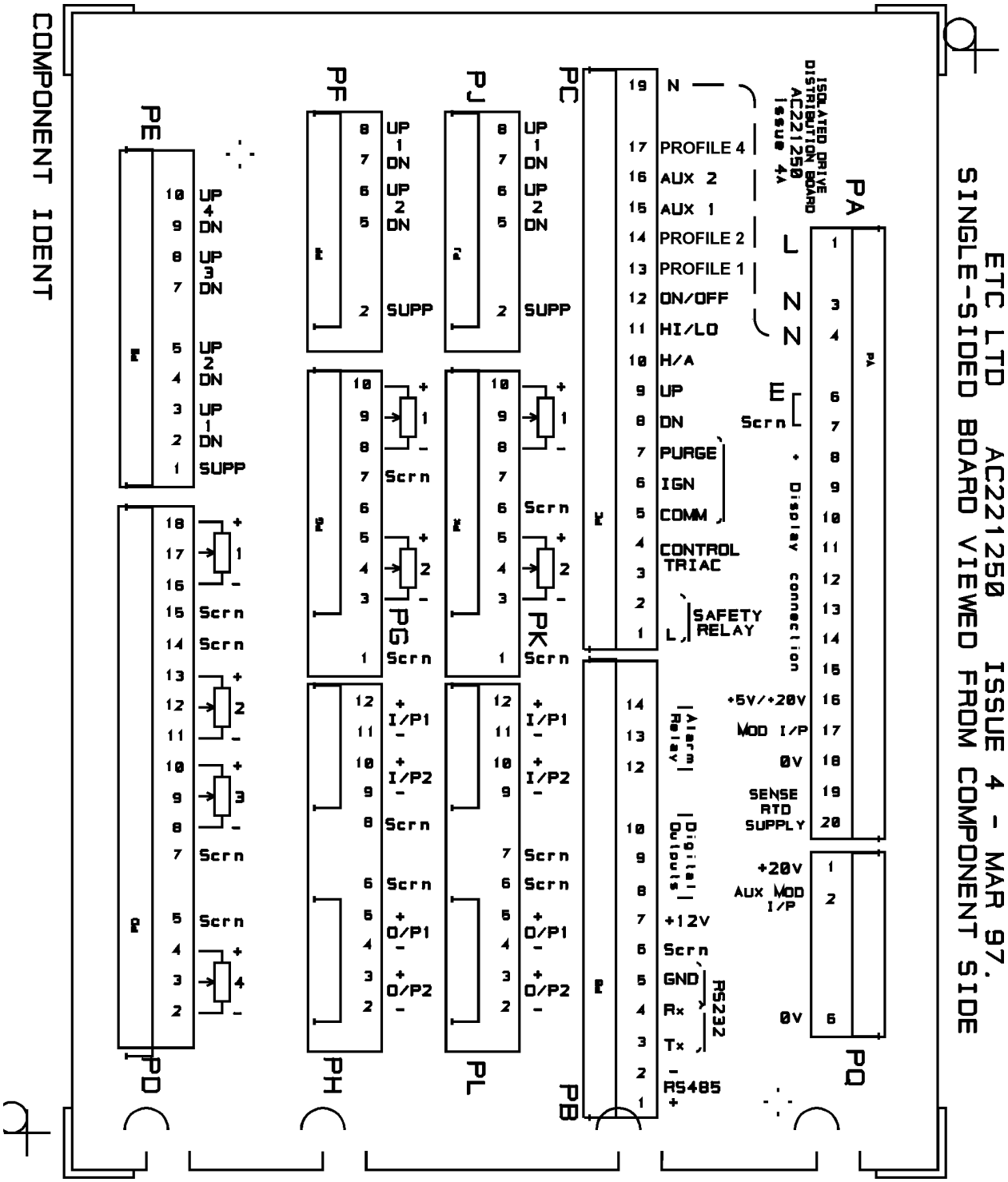

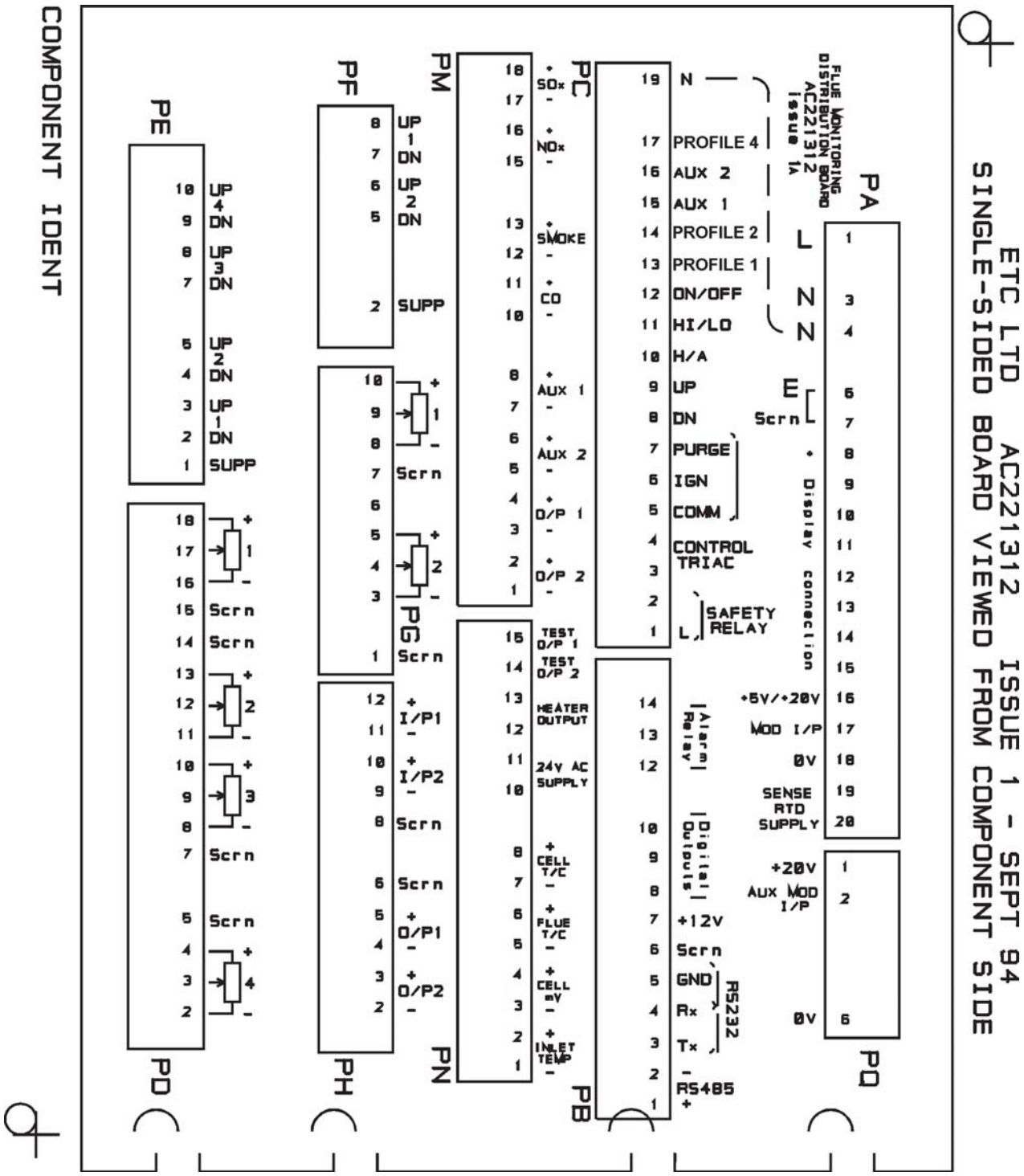
ETC LTD AC221312 ISSUE 1 - SEPT 94
SINGLE-SIDED BOARD VIEWED FROM COMPONENT SIDE
COMPONENT IDENT
FLUE MONITORING DISTRIBUTION BOARD AC221312 Issue 1A
PA
PB
PC
PD
PE
PF
PG
PH
PM
PN
PQ
L
N
N
E
Scrn
Display connection
PROFILE 4
AUX 2
AUX 1
PROFILE 2
PROFILE 1
ON/OFF
HI/LO
H/A
UP
DN
PURGE
IGN
COMM
CONTROL TRIAC
SAFETY RELAY
Alarm Relay
Digital Outputs
+12V
Scrn
GND
Rx
Tx
RS232
RS485
+5V/+20V
MOD I/P
0V
SENSE RTD SUPPLY
+20V
AUX MOD I/P
0V
SOx
NOx
SMOKE
CO
AUX 1
AUX 2
O/P 1
O/P 2
TEST O/P 1
TEST O/P 2
HEATER OUTPUT
24V AC SUPPLY
CELL T/C
FLUE T/C
CELL mV
INLET TEMP
UP 1 DN
UP 2 DN
SUPP
I/P1
I/P2
O/P1
O/P2
UP 4 DN
UP 3 DN
UP 2 DN
UP 1 DN
SUPP

COMMUNICATION

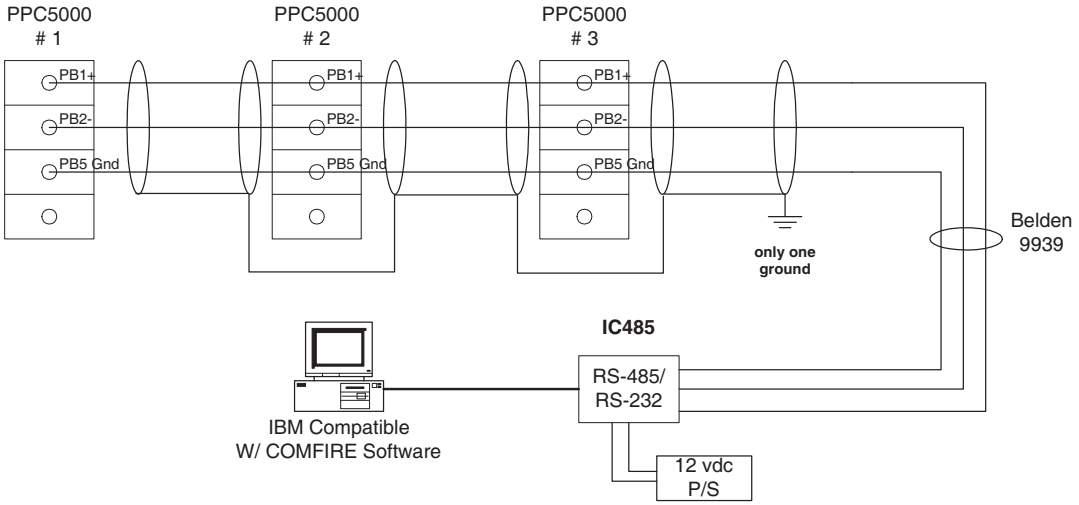

RS485 OR MODBUS INTERFACE

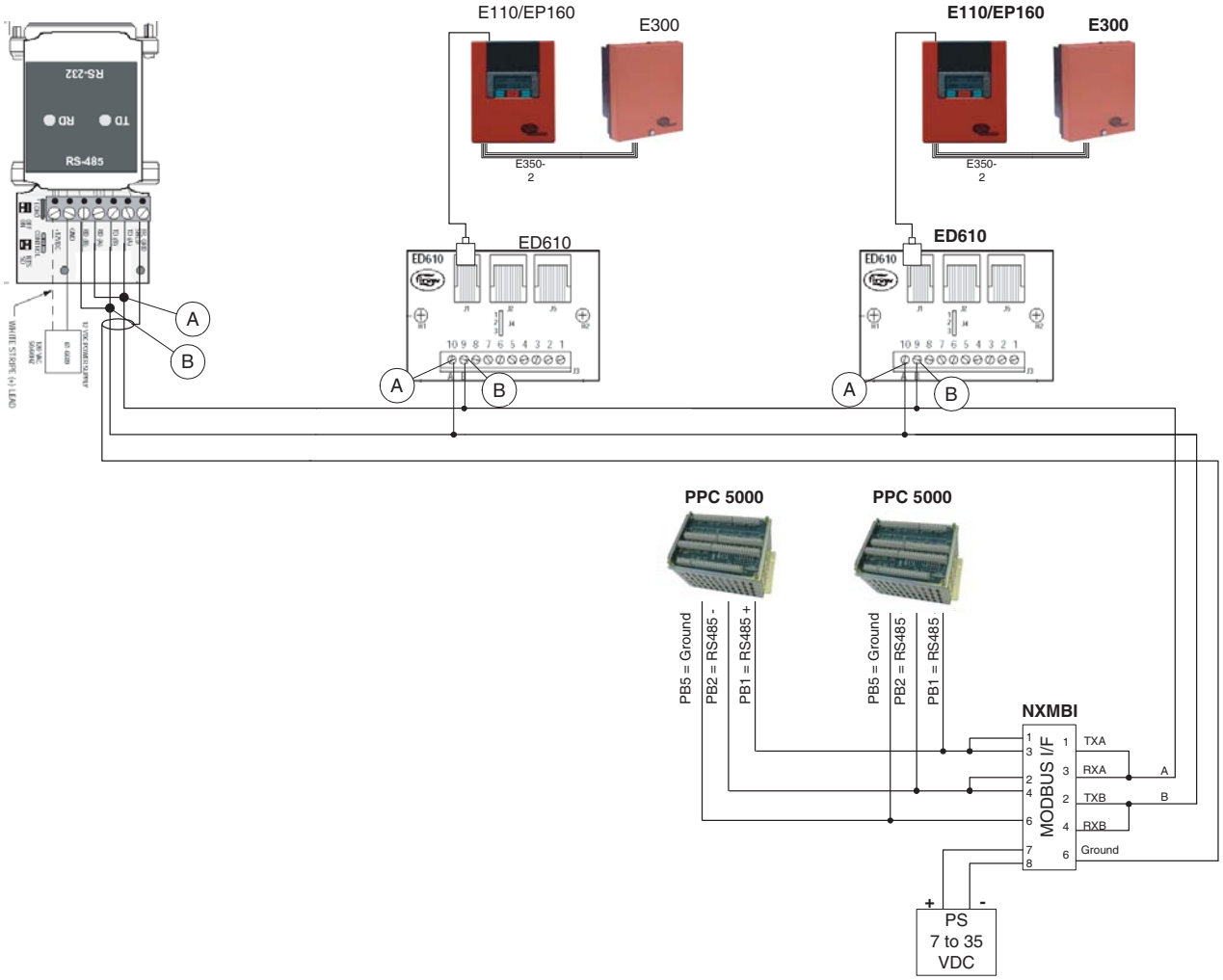

NOTICE

When Fireye products are combined with equipment manufactured by others and/or integrated into systems designed or manufactured by others, the Fireye warranty, as stated in its General Terms and Conditions of Sale, pertains only to the Fireye products and not to any other equipment or to the combined system or its overall performance.

WARRANTIES

FIREYE guarantees for *one year from the date of installation or 18 months from date of manufacture* of its products to replace, or, at its option, to repair any product or part thereof (except lamps, electronic tubes and photocells) which is found defective in material or workmanship or which otherwise fails to conform to the description of the product on the face of its sales order. **THE FOREGOING IS IN LIEU OF ALL OTHER WARRANTIES AND FIREYE MAKES NO WARRANTY OF MERCHANTABILITY OR ANY OTHER WARRANTY, EXPRESS OR IMPLIED.** Except as specifically stated in these general terms and conditions of sale, remedies with respect to any product or part number manufactured or sold by Fireye shall be limited exclusively to the right to replacement or repair as above provided. In no event shall Fireye be liable for consequential or special damages of any nature that may arise in connection with such product or part.

FIREYE®
3 Manchester Road
Derry, New Hampshire 03038 USA
www.fireye.com

PPC-5000
APRIL 18, 2013
supersedes May 27, 2010