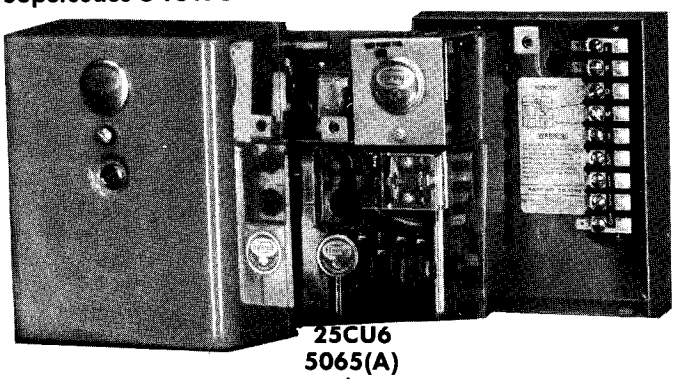

25CU6
5065(A)

UV

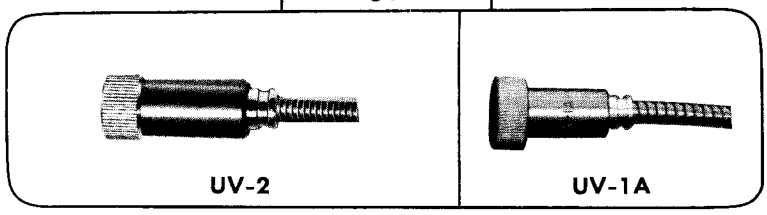

FLAME SAFEGUARD SYSTEM

U.L. Listed File #MP1537 C.S.A. File #7989

FEATURES:

The Fireye Type 25CU6 Model 5065(A) FLAME SAFEGUARD CONTROL provides ignition and flame failure protection for Automatically Ignited Oil and Gas Burners. In conjunction with limit and operating controls and interlock devices, it automatically programs the operation of Burner/Blower Motor, Ignition, Main Fuel Valves and Modulator.

The control cycles automatically when the operating control circuit closes and following a power interruption, but must be manually reset following a safety shutdown.

Featured are — enforced maximum air flow prepurge, pilot proving prior to energizing the main fuel valve, selectable 10-15 second trial for ignition of main flame and a postpurge following fuel shutoff.

A safe start interlock is incorporated which is effective on every start. Terminals are provided for the connection of a main fuel valve interlock switch which must be closed prior to start up and during the prepurge. The modulator switching circuit drives the air dampers closed during the off period; open during the purge; to the starting position prior to lightoff; and to automatic control after the main flame is established. Interlock circuits require proof that the dampers are open during the purge and at the starting position during lightoff. An interlock circuit is provided for air flow switches, fuel pressure switches, etc., which must be closed during the prepurge and firing cycle. A safety lockout will occur if this interlock circuit opens during an operating cycle. The control system is designed to de-energize all fuel valves within 4 seconds following flame failure. An alarm circuit actuates audible or visual alarms following a safety lockout. The control incorporates plug-in design for ease of installation.

•

The Fireye 25CU6-5065(A) control features ultra-violet flame detection utilizing a miniture U.V. scanner.

SPECIFICATIONS

SUPPLY VOLTAGE AND FREQUENCY:
25CU6 120 volts (Max. 132v, Min. 102v) 60 hz
May be used on 50 hz if timings multiplied by 1.2

VOLT-AMPERE RATINGS:
25CU6
Power consumption — operating 20 va
Power consumption — standby 10 va
Maximum simultaneous connected load: 2000 va

OPERATING TEMPERATURE:

	Max.	Min.
25CU6 control ambient,	125F	−20F
UV-1A, UV-2 flame scanner	212F	−40F

SHIPPING WEIGHT: Per System, 11 lbs. approximate

		A	B
Terminal	Typical Load	Maximum Rating @ 120v–60 hz	Alternate Rating @ 120v–60 hz
5, 6 (Individually or Combined)	Pilot Valve(s) and Ignition Transformer(s)	50 va Pilot Duty (Solenoid Valves) plus 500 va (Transformer)	125 va Pilot Duty (Solenoid Valve) plus 300 va (Transformer)
7	Main Fuel Valve(s)	250 va Pilot Duty (Solenoid Valve)	1250 va Opening 500 va holding (Motorized Valve) plus 65 va Pilot Duty (Solenoid Valve)
M	Burner/ Blower Motor	9.8 F.L.A. 58.8 L.R.A.	250 va Pilot Duty (motor starter coil)
10-11-12-X	MODULATOR	125 va Pilot Duty	
A	Alarm	50 va Pilot Duty	

Terminal ratings may be selected from either column A or B; (selecting the rating from the column for each terminal which best applies to the connected load on that terminal).

See "ELECTRICAL RATINGS" on a following page for definition of VA RATINGS.

DIMENSION DRAWINGS

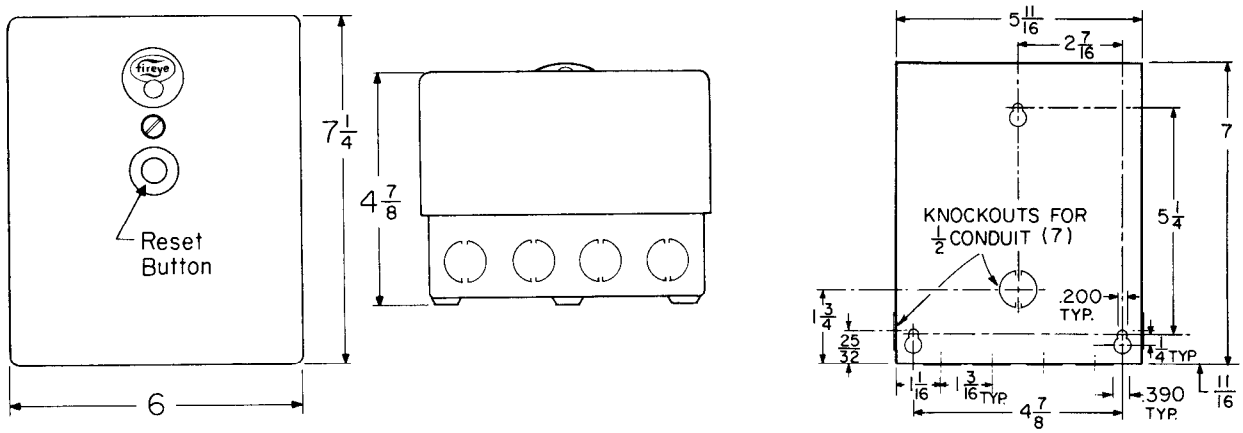

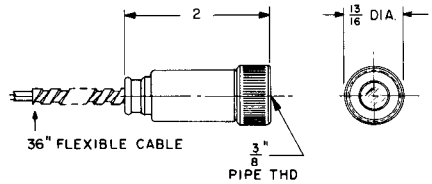

UV-2

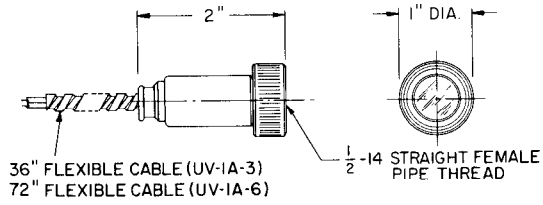

UV-1A

The grounding strap must be removed for type 25CU6.

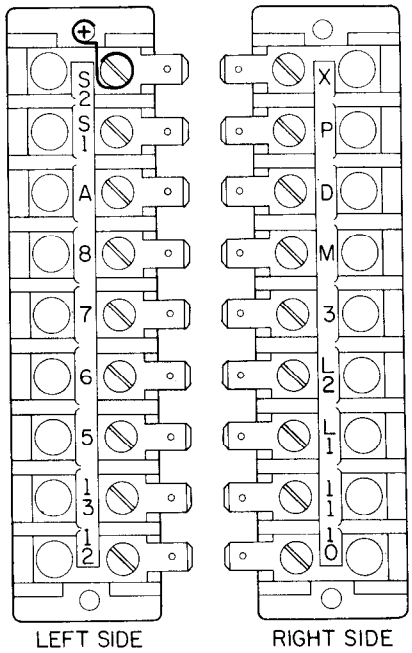

TERMINAL BOARDS

AUTOMATIC PRIMARY SAFETY CONTROL

55-1796 C

TYPE 25CU6 MODEL 5065A — U.S. PATENT NO. 3,283,154 — SEE BULLETIN C-13

L1	120 VOLT SUPPLY (HOT)	M-D	LOW FIRE INTERLOCK	D-8	PURGE INTERLOCK		X	HIGH	MODULATOR (125 VA PILOT DUTY AT 120 VAC OR 2 AMP AT 30 VAC)
L2	120 VOLT SUPPLY (COMMON)	3-13	FUEL VALVE INTERLOCK	7	MAIN FUEL (250 VA PILOT DUTY)		12	LOW	
L1-13	LIMIT AND OPER. SWITCHES	M	BURNER MOTOR (250 VA PILOT DUTY OR 9.8 FLA 58.8 LRA)	A	ALARM (50 VA PILOT DUTY)		11	AUTO	
3-P	NON-RECYCLE INTERLOCKS			S1	← FLAME DETECTOR →	S2	10	COM.	

IGNITION CONNECTIONS COMBINED RATING: 500 VA TRANSFORMER AND 50 VA PILOT DUTY

TRANS.	PILOT	JUMPER	FUEL	TRIAL - FOR - IGNITION PERIOD
5	5	—	OIL OR GAS	10 SEC. SUPERVISED
6	6	—	OIL ONLY	15 SEC. SUPERVISED
5	NONE	6 & 7	OIL ONLY	7 SEC. UNSUPERVISED

ALL RATINGS 120V 60 HZ EXCEPT AS NOTED — ALL WIRING MUST BE N.E.C. CLASS 1. — TOTAL CONNECTED LOADS NOT TO EXCEED 2000 VA.

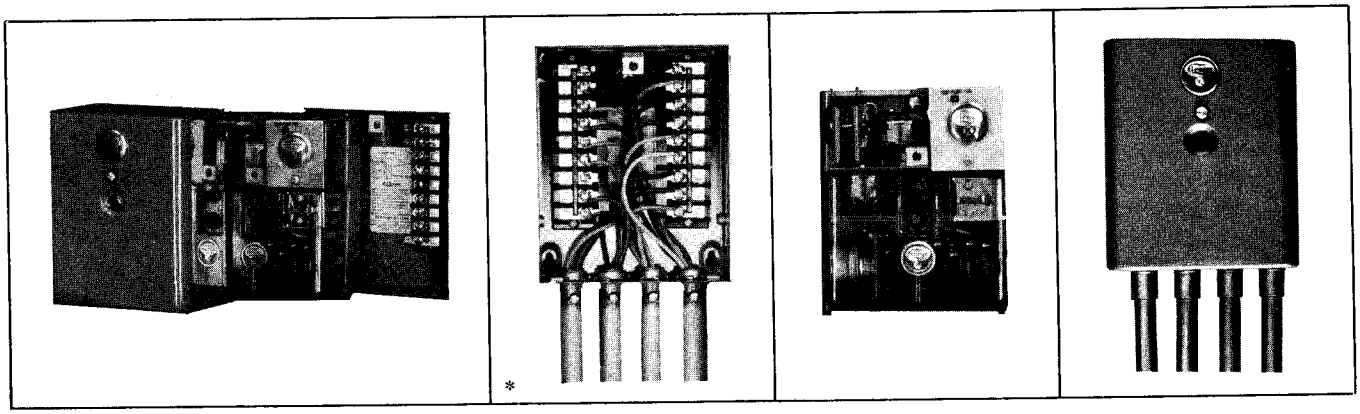

Installation -

Select a location for the subbase where ambient temperature is within the specified rating, and free from excessive vibration and dust. It may be mounted in any position.

* The grounding strap on the base terminal strip must be removed for type 25CU6.

The chassis is mounted on the subbase with a single quarter turn screw which when tightened completes contact between subbase and chassis.

All wiring to numbered terminals must be N. E. C. Class 1 wire. No. 14 TW (moisture resistant) wire is recommended.

ELECTRICAL RATINGS

"VA" ratings (not specified as pilot duty) permit the connection of transformers and similar devices whose inrush current is approximately the same as their running current.

"VA pilot duty" ratings permit the connection of relays, solenoid valves, lamps, etc. whose total operating load does not exceed the published rating and whose total inrush current does not exceed 10 times the rating.

"Running and locked rotor" ratings are intended for motors. VA and VA (pilot duty) loads may be added to a motor load provided the total load does not exceed the published rating.

TYPICAL U-V-EYE INSTALLATIONS

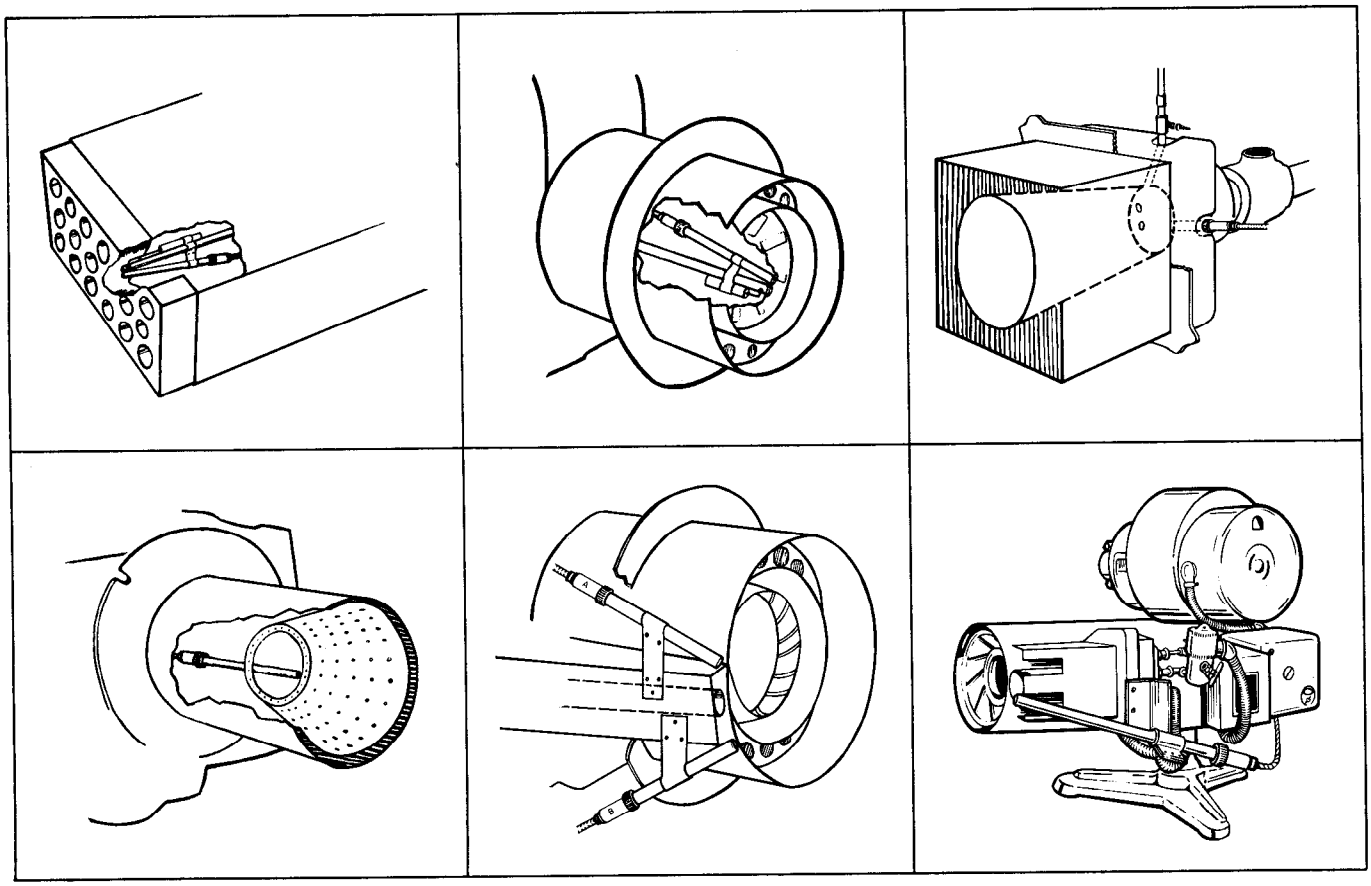

APPLYING THE UV SCANNERS

GENERAL REQUIREMENTS

1. As close as possible — 18″ or closer.
2. As cool as possible — Not over 212°F.
3. Avoid sighting the spark — Resight scanner, shield between spark and scanner, or orifice to reduce reflected signal from spark.
4. Must see pilot and/or main flame — Scanner view must be unobstructed.
5. Minimum pilot test — See Testing.

The maximum UV signal from a flame is found in the first one-third of the visible flame taken from the point where the flame begins. The scanner sight pipe should be aimed at this area.

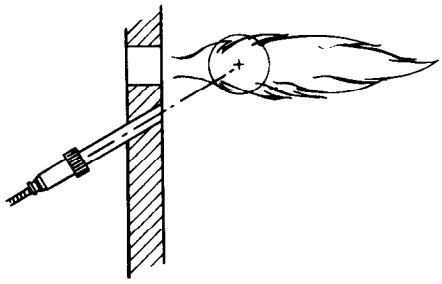

A. Scanner Wiring

The UV-1A scanner is supplied with 36″ or 72″ of flexible cable.

The UV-2 scanner is supplied with 36″ of flexible cable. If it is necessary to extend the scanner leads, the following instructions apply:

1. *Selection of Type of Wire*
   a. Use #18 wire with 80°C, 600 volt insulation for up to 200 foot distance.
   b. Asbestos insulated wire should be avoided because of its moisture absorbing characteristics.
2. *Installation of Extended Wiring*
   a. For wiring runs up to 10 feet, the scanner leads may be run with the power wires in a common grounded conduit.
   b. For wiring runs over 10 feet, the scanner leads should be installed in a separate grounded conduit.
3. *Multiple Scanner Installations*
   a. Where unshielded leads from up to 24 scanners are installed in a single metallic conduit, the total distance between the scanners and controls should not exceed 200 feet.
   b. There may be no power wires included in the conduit when multiple scanner wires are installed.

B. Scanner Mounting

Where possible, obtain the burner manufacturer's instructions for mounting the scanner. This information is available for most standard burners manufactured. The scanner mounting must comply with the following general instructions:

1. Locate the scanner as close as possible to the flame.
2. Select a scanner location that will remain within the ambient temperature limits of the UV-eye scanner (212°F). If cooling is required, use (a) an insulating coupling (Fireye part no. 35-69) to reduce conducted heat; (b) a window union (Fireye part no. 60-1257) to seal off furnace or burner pressure; (c) cooling air to reduce the scanner sight pipe temperature.
3. Mount rigidly a short length of black iron pipe in a position that permits an unobstructed view of the pilot and/or main flame.
4. The scanner must not sight the spark directly or any part of the burner that can reflect the spark back to the scanner.
5. The maximum UV signal from a flame is found in the first one-third of the visible flame taken from the point where the flame begins. The scanner sight pipe should be aimed in this area.
6. A correct scanner application will not see a pilot flame that is too small to ignite the main flame reliably. Note particularly the test for minimum pilot.
7. On installations having negative pressure combustion chambers, a small hole (1/8″ or 3/16″) drilled in the sight pipe will assist in keeping the pipe clean and free from smoke.
8. Two scanners may be installed on one burner if it is necessary to view two areas to obtain reliable detection of the flame. They should be wired in parallel.
9. The UV-eye scanner is designed to seal off the sight pipe up to pressures of 1 psi when the scanner lock nut is firmly tightened. Pressures in excess of 1 psi should be blocked from the scanner. A lens union (Part no. 60-1290) or window union (Part no. 60-1257) may be used. Each is rated from −3 to +100 psi max.
10. To increase scanner sensitivity, a quartz lens union (Part no. 60-1290) may be used. The quartz lens permits location of the UV-eye at twice the normal distance. Use ½″ x 1½″ nipple between UV-1A scanner and union. Use ⅜″ x close nipple and ½″ x ⅜″ bushing on UV-2 applications.

INSTALLATION TESTING

To test the C series controls for flame signal, A 1,000 ohms/volt or greater D.C. voltmeter should be used, and set on the proper scale to read the voltages noted in the table below.

FLAME SIGNAL D.C. VOLTAGE			
	Drop Out	Normal	Maximum
25CU6	7	20	25

To assure sufficient signal margin to hold in the flame relay during random momentary downward fluctuations of signal, it is recommended that a signal as close to or greater than normal be obtained.

Note: One lead from meter is placed in test jack, other lead is grounded.

A. Normal Pilot Test

1. Before making pilot flame checks, manually shut off fuel supply to main burner.
2. Refer to note under paragraph C4.
3. Allow control to program normally and observe pilot signal on voltmeter. If average voltage reading is low, attempt to increase by readjusting pilot flame or realigning detector.
4. Check pilot failure protection by manually shutting off pilot fuel and then proceeding with a normal attempt to start. With no pilot fuel, the control should go off on safety.

B. Main Flame Test

1. Proceed through a normal startup. After the pilot flame is shut off, observe the reading on the test voltmeter. If the voltmeter reading is low, attempt to increase by readjusting main flame or realigning detector.
2. Check main flame failure protection by manually shutting off the main fuel supply. Within 4 seconds after main flame goes out, the flame relay (RF) will drop out. The alarm circuit will be energized following safety lockout.

C. Minimum Pilot Test

This test insures that the detector will not detect a pilot flame too small to light off the main flame. It must be made on every new installation and following any repositioning of the detector.

1. Follow steps 1 and 2 of A above.
2. Allow control to program normally to dial "2" position. Stop timer (See note under paragraph C4.). Reduce fuel supply to the pilot until the flame relay remains de-energized, then slowly increase pilot fuel just to the point where the flame relay becomes steadily energized. This is called the minimum pilot adjustment.
3. Turn on main fuel with hand valve. The main fuel must light immediately from the reduced pilot flame. CAUTION: If main flame does not ignite in approximately the same time as with normal full pilot flame, immediately turn the burner switch off. Then repeat the minimum pilot test until main flame lights reliably on several trials.
4. When minimum pilot test is completed, increase the pilot flame to normal size. Remove paper from K12 contact.

Note: To interrupt the cam timer during the programming cycle, insert a piece of paper to block open the K12 contact. See Cam Chart for K12 location.

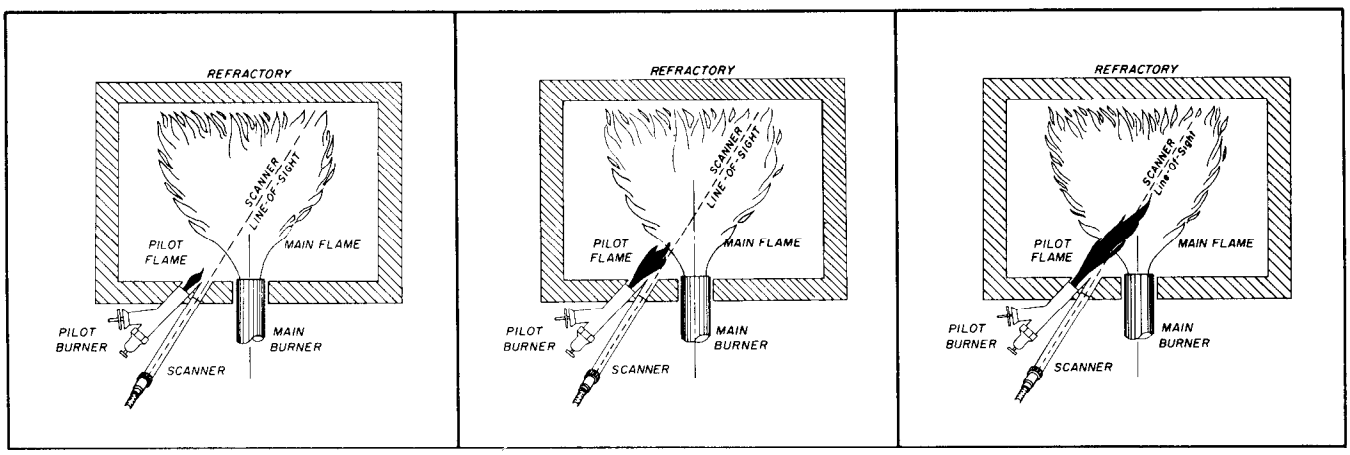

INSUFFICIENT PILOT | MINIMUM PILOT | NORMAL PILOT

SEQUENCE OF OPERATION

SYSTEM FUNCTION		
Time (seconds)	Dial Indication	START-UP
0	0	Power on, limit switch closed, fuel valve switch closed, operating control closes. Relay RL and RA energized. Burner motor and timer motor powered.
3	—	Mod circuit, terminals 10-X, close, motor drives toward high fire.
17	—	Air flow switch must be closed.
22	—	Purge air flow switch must be closed. If not, timer will pause.
33	—	Mod circuit, terminals 10-X open, 10-12 close. Motor returns to low fire.
53	—	Low fire start switch must be closed. If not, timer will pause.
60	1	Ignition on — terminals 5 and 6.
67	—	End of pilot trial for ignition period. Flame must now be proved.
70	2	Main fuel on, terminal 7.
80	3	Ignition off, terminal 5.
85	4	Ignition off, terminal 6. Terminals 10-11 close, 10-12 open; modulator released to automatic.
100	Dot	Programming timer stops — end of start-up cycle.
		SHUT DOWN
100	Dot	Operating control opens. Main fuel valve closes. Timer restarts.
120	0	Burner motor and timer motor stop. The system is ready for a restart whenever operating control recloses.
		SAFE START CHECK
		Any condition which causes the flame relay to be in its energized position during the purge period, will cause a safety lockout.

ALTERNATE OPERATING SEQUENCES

1. Direct spark ignition, or unproved pilot (Terminals 6 and 7 jumpered). The main fuel valve will be energized at dial position 1. A 7 second trial for ignition of main flame is provided. There will be no action at dial position 2. Otherwise the operating sequence wll be the same.

2. For direct spark ignited 2 stage oil burners, connect the primary oil valve to terminal 6, the secondary oil valve to terminal 11, and jumper between terminals 6, 7, 10.

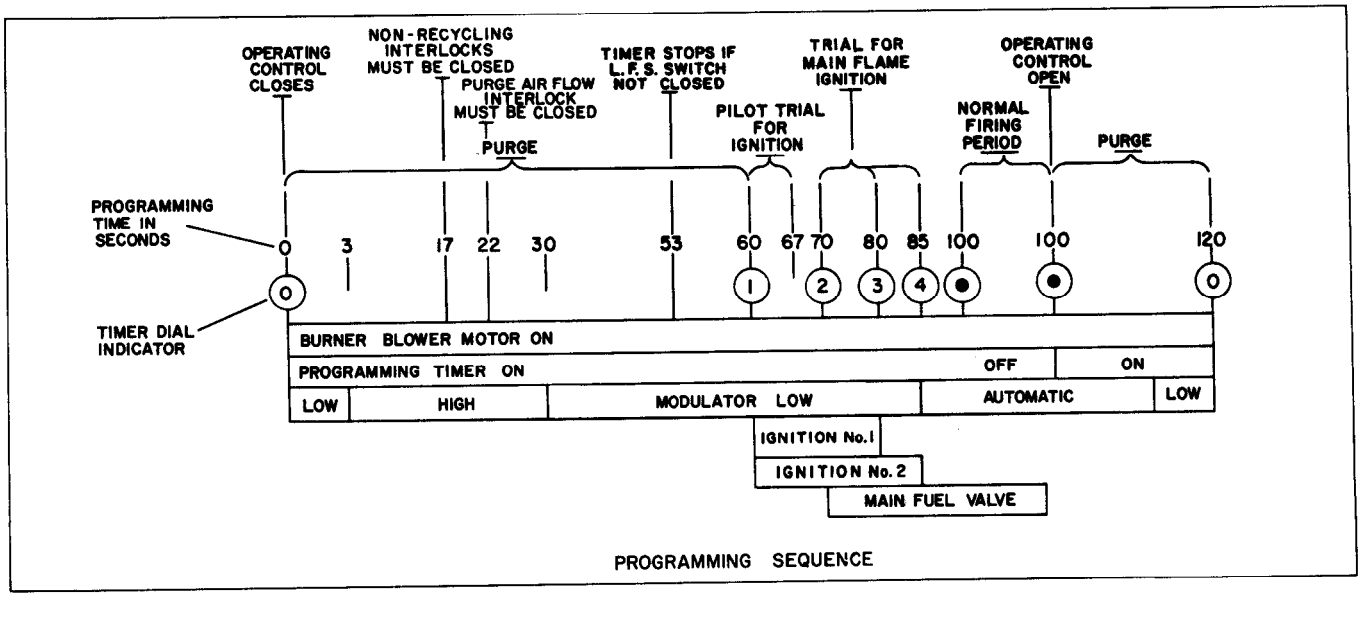

PROGRAMMING SEQUENCE

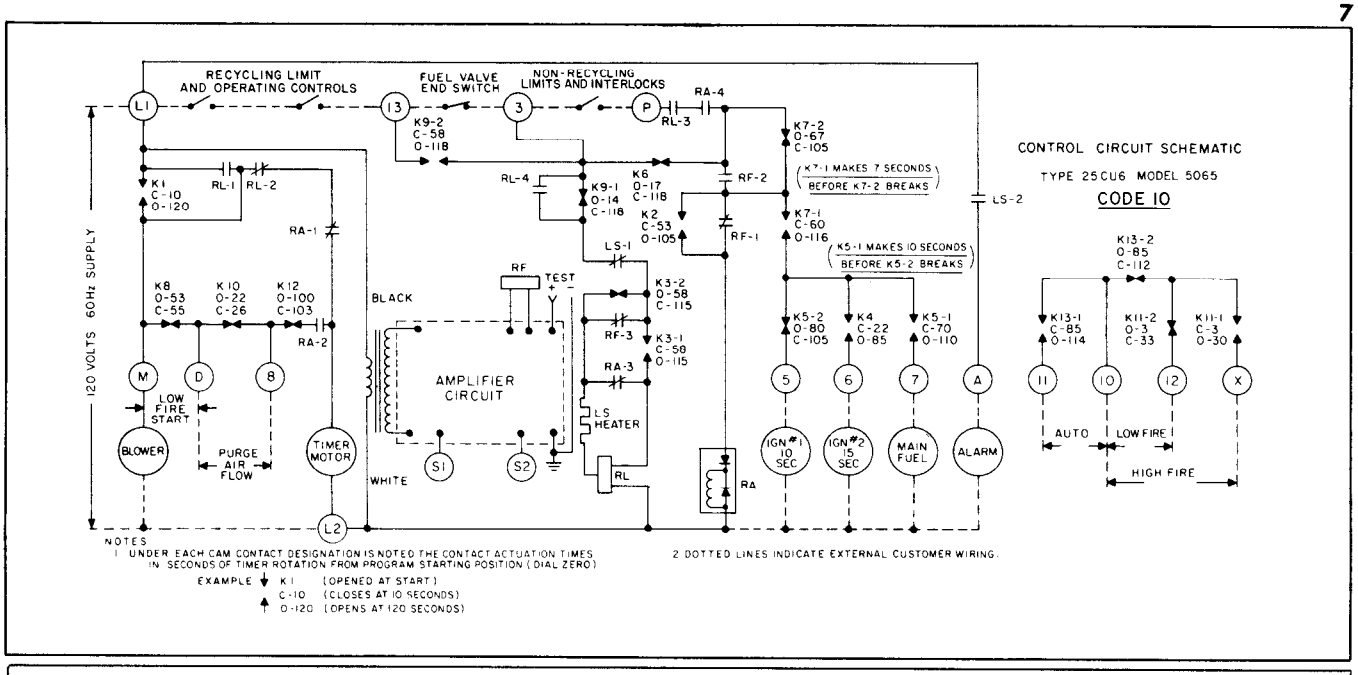
CONTROL CIRCUIT SCHEMATIC
TYPE 25CU6 MODEL 5065
CODE 10
RECYCLING LIMIT AND OPERATING CONTROLS
FUEL VALVE END SWITCH
NON-RECYCLING LIMITS AND INTERLOCKS
120 VOLTS 60Hz SUPPLY
AMPLIFIER CIRCUIT
BLOWER
TIMER MOTOR
LOW FIRE START
PURGE AIR FLOW
BLACK
WHITE
LS HEATER
IGN #1 10 SEC
IGN #2 15 SEC
MAIN FUEL
ALARM
AUTO
LOW FIRE
HIGH FIRE
K7-1 MAKES 7 SECONDS BEFORE K7-2 BREAKS
K5-1 MAKES 10 SECONDS BEFORE K5-2 BREAKS
NOTES
1 UNDER EACH CAM CONTACT DESIGNATION IS NOTED THE CONTACT ACTUATION TIMES IN SECONDS OF TIMER ROTATION FROM PROGRAM STARTING POSITION (DIAL ZERO)
EXAMPLE K1 (OPENED AT START)
C-10 (CLOSES AT 10 SECONDS)
O-120 (OPENS AT 120 SECONDS)
2 DOTTED LINES INDICATE EXTERNAL CUSTOMER WIRING.

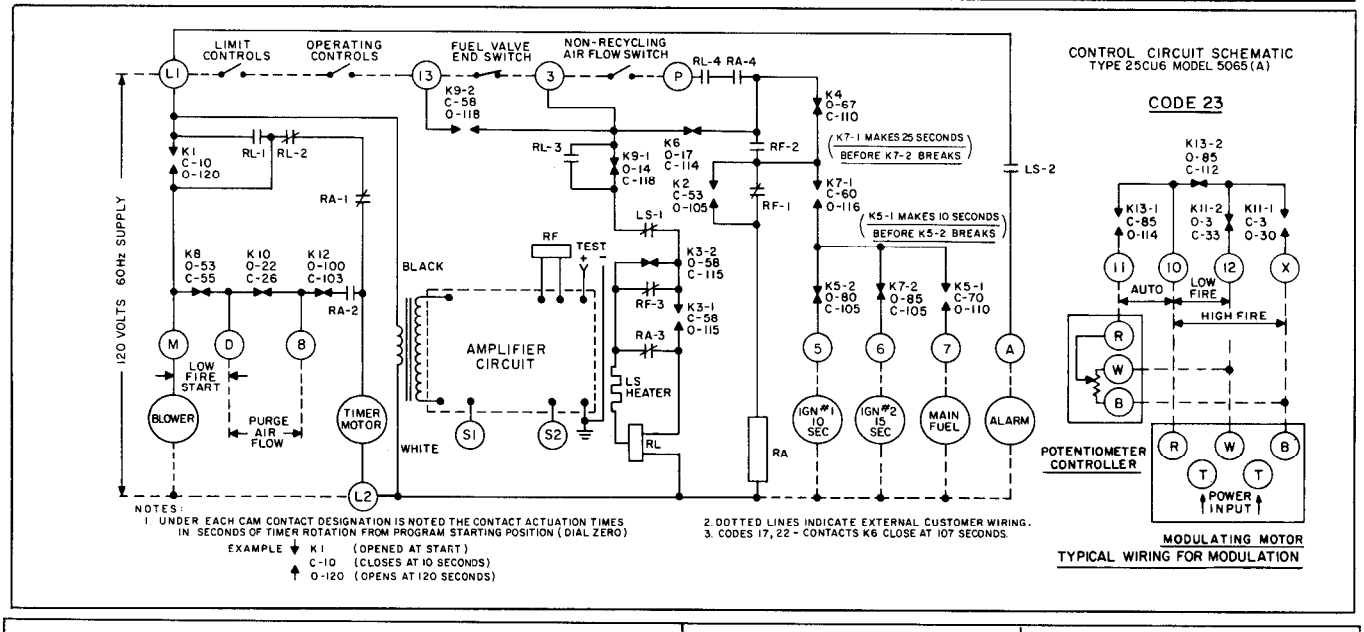
CONTROL CIRCUIT SCHEMATIC
TYPE 25CU6 MODEL 5065(A)
CODE 23
LIMIT CONTROLS
OPERATING CONTROLS
FUEL VALVE END SWITCH
NON-RECYCLING AIR FLOW SWITCH
120 VOLTS 60Hz SUPPLY
AMPLIFIER CIRCUIT
BLOWER
TIMER MOTOR
LOW FIRE START
PURGE AIR FLOW
BLACK
WHITE
LS HEATER
IGN #1 10 SEC
IGN #2 15 SEC
MAIN FUEL
ALARM
K7-1 MAKES 25 SECONDS BEFORE K7-2 BREAKS
K5-1 MAKES 10 SECONDS BEFORE K5-2 BREAKS
AUTO
LOW FIRE
HIGH FIRE
POTENTIOMETER CONTROLLER
POWER INPUT
MODULATING MOTOR
TYPICAL WIRING FOR MODULATION
NOTES:
1 UNDER EACH CAM CONTACT DESIGNATION IS NOTED THE CONTACT ACTUATION TIMES IN SECONDS OF TIMER ROTATION FROM PROGRAM STARTING POSITION (DIAL ZERO)
EXAMPLE K1 (OPENED AT START)
C-10 (CLOSES AT 10 SECONDS)
O-120 (OPENS AT 120 SECONDS)
2. DOTTED LINES INDICATE EXTERNAL CUSTOMER WIRING.
3. CODES 17, 22 - CONTACTS K6 CLOSE AT 107 SECONDS.

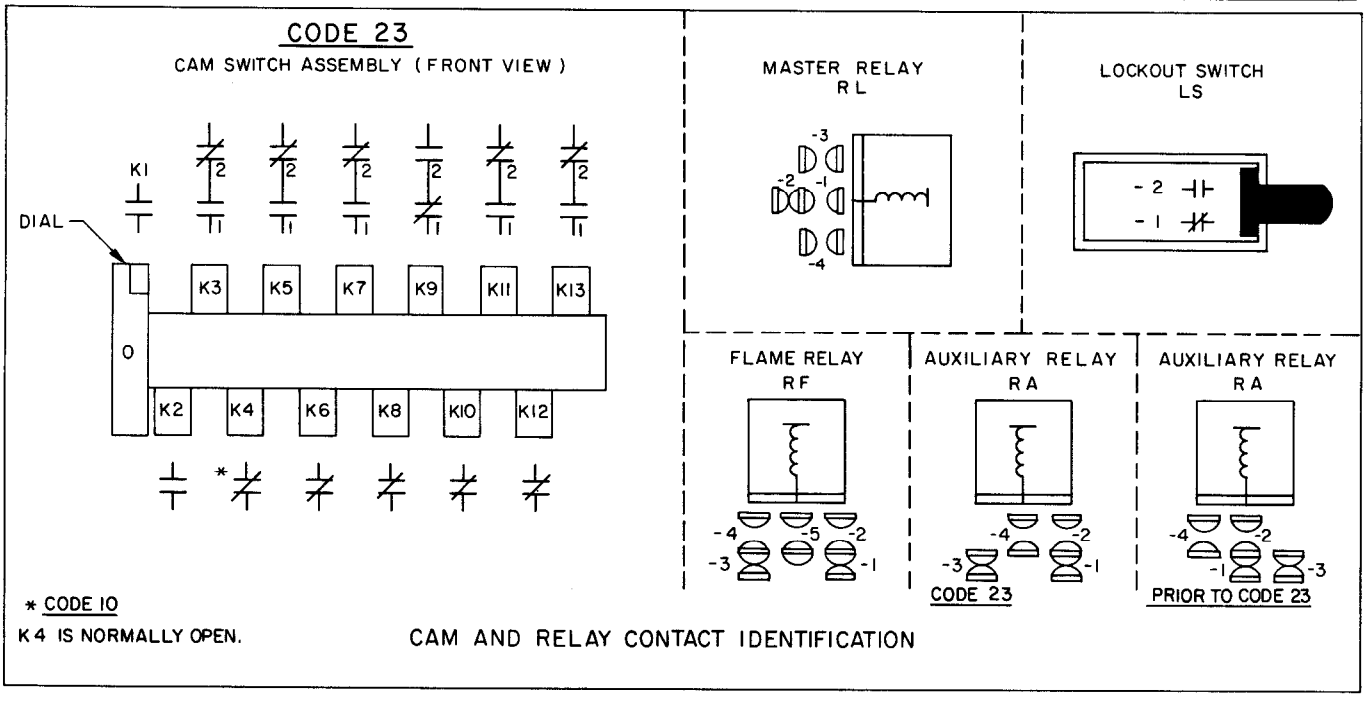
CODE 23
CAM SWITCH ASSEMBLY (FRONT VIEW)
DIAL
MASTER RELAY
RL
LOCKOUT SWITCH
LS
FLAME RELAY
RF
AUXILIARY RELAY
RA
CODE 23
AUXILIARY RELAY
RA
PRIOR TO CODE 23
* CODE 10
K4 IS NORMALLY OPEN.
CAM AND RELAY CONTACT IDENTIFICATION

Trouble in C-Series system installations can be readily isolated by following the approved procedure in the sequence given below. Before beginning any trouble-shooting however, make sure that:

1. Installation and wiring have been made in accordance with the installation instructions.
2. Chassis is properly positioned on base and the retaining screw is tightened.
3. The lockout switch is reset.

In the following tabulation, trouble symptoms appear within the boxes and possible causes are listed below the boxes.

Code 17,22,23 Units

Zero voltage at terminals L1-L2.

1. Disconnect switch off.
2. Blown fuse.
3. Open limit switch.
4. Broken wire.
5. Incorrect wiring.

Low voltage at terminals L1 and L2.

1. Minimum operating voltage is 102 volts.

Zero voltage at terminals 13-L2.

1. Open limit switch or operating control.
2. Broken wire or loose connection.

Zero voltage at terminals 3-L2.

1. Fuel valve interlock not closed.

Relay RA does not pull in.

1. Contacts K-6, K4, K9-1, RF-1 dirty or open.
2. RA armature mechanically stuck open.
3. Timer not at dial "O'" position.
4. RA relay coil open or shorted.

Relay RL does not pull in.

1. Contacts K9-1, LS-1, K3-2, RF-3 dirty or open.
2. LS heater open.
3. RL coil open or shorted.
4. Timer not at dial "O".
5. RL armature mechanically stuck open.
6. Lockout switch tripped.

Master relay (RL) pulls in but burner motor does not start.

1. Insufficient voltage between terminals L2 and M.
2. Blown motor fuse or motor starter overloads tripped.
3. Burner motor incorrectly wired.
4. Defective motor or starter.
5. Contact RL-1 dirty or open.

Relay RL pulls in, timer motor does not start.

1. Contacts K8, K10, K12, RA-2, RL-1 dirty or open.
2. Relay RA not energized.
3. Defective timer motor.

Modulator motor does not drive toward open-damper position at 3 seconds.

1. Modulator motor not powered.
2. Linkage jammed.
3. Incorrect wiring.
4. Contacts K11-1, K13-2 dirty or open.
5. Contact K11-2 does not open.
6. Defective modulator equipment.

Relay RL drops out at 14 seconds.

1. Contact RL-3 dirty or open.

Relay RA drops out at 17 seconds.

1. Air flow switch not closed. (3-P)
2. Incorrect wiring.
3. Contacts RL-4, RA-4 dirty or open.

Lockout trips during purge.

1. Relay RF in energized position.
2. Contacts RA-3, K3-1 not open.

Timer motor stops at 22 seconds.

1. Purge airflow interlock circuit (8-D) open.

Modulator motor does not drive toward closed-damper position at 33 seconds.

1. Modulator motor not powered.
2. Linkage jammed.
3. Incorrect or faulty wiring.
4. Contact K11-2 dirty or open.

Timer motor stops at 53 seconds.

1. Starting interlock circuit (M-D) not satisfied.

RA drops out at dial position "1".

1. Momentary or sustained opening of limit circuit (L1-13), or interlock circuit (3-P).
2. Contact K2 dirty or open.

Timer dial reaches position "1". Pilot flame is not established.

1. Insufficient voltage between Terminals 2 and L1 or 5 or 6.
2. Contacts RL-4, RA-4, K7-1, K7-2, K5-2, K4 dirty or open.
3. Defective gas valve.
4. Defective ignition transformer or electrode.
5. Improper electrode setting.
6. Plugged pilot burner.
7. Insufficient gas pressure.
8. Improper pilot burner adjustment.
9. Ignition assembly incorrectly wired.

Timer dial at position "1". RL drops out.

1. K3-1 contact dirty or open.

Flame relay (RF) does not pull in when pilot flame lights.

1. Pilot flame too small. Make sure gas pressure is not less than that specified for the pilot burner.
2. Scanner sight tube obstructed or scanner lens dirty.
3. Scanner sighting is incorrect.
4. Scanner is incorrectly wired.
5. Flame relay is mechanically bound.
6. Defective Scanner, or cell.
7. Defective control.
8. Scanner is too hot or sees hot refractory.

Main flame is not established at dial "1". (Spark ignited burner)

1. No fuel or plugged burner.
2. Burner not properly adjusted.
3. Defective main fuel solenoid valve (thermistor delay valves not suitable).
4. Jumper between 6–7 or 5–7 not installed.
5. Spark ignition not adequate.
6. Contacts K5-2, K7-2, K7-1, K4 open or dirty.

Timer dial reaches position "2". Main fuel valve stays shut.

1. Insufficient voltage between Terminals 2 and 7.
2. Contact K5-1 dirty or open.
3. Defective valve.
4. Incorrect wiring.
5. Pilot flame not detected.

Main flame does not light. (Pilot ignited burner)

1. Defective main fuel solenoid valve.
2. No main fuel or burner out of adjustment.
3. Inadequate pilot flame.
4. Incorrect wiring, broken wire or loose connection.
5. Contact K5-1 open or dirty.

Fuel valve is energized. Main flame does not light.

1. Inadequate pilot.
2. Incorrect burner adjustment.
3. No main fuel.

Main flame lights and then goes out.

1. Lockout switch has tripped. Allow to cool for two minutes and reset.
2. Limit and operating control circuit or non-recycling interlock circuit open.

Safety shutdown initiated at or after dial position "2".

1. Ignition failure.
2. Flame failure.
3. Inadequate flame signal.
4. Non-recycling interlock circuit (3-P) open.

Timer dial reaches position "3". 10 sec. TFI pilot flame does not go out.

1. Gas pilot valve is stuck open.
2. Contact K5-2 does not open.
3. Valve incorrectly wired.

Timer dial reaches position "4". 15 second TFI pilot flame does not go out.

1. Contact K7-2 does not open.
2. See 10 second TFI above for additional data.

Timer dial reaches position "4". Modulator motor does not respond to modulation controller.

1. Modulator motor not powered.
2. Setting of modulation controller incorrect.
3. Linkage jammed.
4. Incorrect wiring.
5. Contacts K13-1 dirty or open.
6. Defective modulator equipment.
7. Contact K13-2 does not open.

Main flame goes out when pilot shuts off.

1. Scanner does not "see" main flame.
2. Incorrect burner adjustment.
3. Incorrect wiring to main fuel valve.

Timer does not stop at "dot".

1. Contact K12 stuck closed.

Lockout trips erratically with burner operating normally.

1. Contacts RF-3, K3-2 or RA-3 remain closed.
2. Insufficient cooling time allotted following a lockout. 1 minute recommended.

Main fuel valve does not shut off when operating control opens.

1. Fuel solenoid valve stuck open.
2. Incorrect wiring.

During post purge period modulator motor does not drive toward damper-closed position.

1. Modulator motor not powered.
2. Linkage jammed.
3. Incorrect wiring.
4. Contact K13-2 and/or K11-2 dirty or open.
5. Defective modulator equipment.

Timer does not rotate to zero when operating control opens.

1. Contacts RL-2 and/or RA-1 dirty or open.
2. Incorrect wiring.

Burner motor and timer do not stop at zero.

1. Operating control has reclosed.
2. Contacts RL-1 or K1 remain closed.

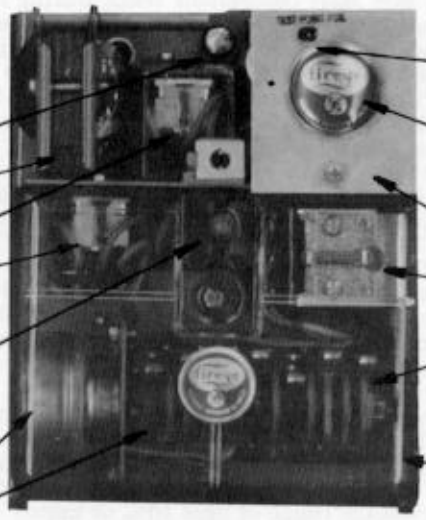

MAINTENANCE

Contacts:

All contacts are designed with adequate wiping action for self cleaning under normal conditions and the switching assemblies are covered for protection against abnormal atmospheres. Should contact cleaning be required, use a burnishing tool or fine crocus. **Never use a file, sandpaper, or apply liquid or aerosol spray cleaners.**

Humidity effects:

In areas of high humidity, the chassis should be removed and placed in a dry atmosphere when the system is expected to be out of service for an extended period.

Scanner:

The scanner must be kept clean. Even a small amount of contamination will reduce the flame signal reaching the detector. A routine schedule should be set up. Wipe the UV tube with a clean soft cloth. If necessary, dampen the cloth with concentrated detergent.

Periodic Safety Checks:

It is recommended that a procedure be established to test, at least once a month, the complete flame safeguard system. This test should verify flame failure safety shutdown and fuel valve tightness.

ROTATION

It is recommended that units purchased as spares be rotated periodically, so that each unit will be placed in operation at least every 90 days.

WARRANTIES AND PURCHASER'S EXCLUSIVE REMEDIES

We guarantee for one year from date of shipment to replace or, at our option, to repair any products or parts thereof (except lamps, electronic tubes and photocells) which are found defective in material or workmanship or which otherwise fail to conform to the contract description or to any warranty, express or implied.

We make no warranties which extend beyond the description of our product on the face of our sales orders.

The Purchaser's remedies with respect to any product or part sold by us shall be limited exclusively to the right to replacement or repair f.o.b. Cambridge, as above provided. In no event shall we be liable for consequential or special damages of any nature which may arise in connection with such product or part.

SUGGESTED SPECIFICATIONS FOR FLAME SAFEGUARD CONTROL FOR AUTOMATIC COMMERCIAL-INDUSTRIAL BURNERS

General

1. Each automatically fired burner shall be equipped with an Electronic Combustion Safety and Programming Control which is UL listed and FM approved. This control shall provide the following:
   a. The control shall accomplish a safe start component check during each start, which will prevent the burner from firing under any condition which causes the flame relay to assume and hold its energized position due to the presence of an actual flame, a flame simulating component failure or mechanical failure.
   b. A purge period of not less than 60 seconds with the damper driven to the open position and an interlock circuit provided to prove air flow rate during the purge period. A starting interlock circuit is required to prove that the burner equipment is in the low fire position at the start of the cycle, and at time of ignition, plus an interlock to prove air flow during the purge and firing cycle.
   c. A pilot establishing period of not more than 7 seconds.
   d. Limited trial-for-ignition of main flame, restricted to 10 or 15 seconds (selectable) for oil or gas.
   e. Safety shutdown following flame failure, with fuel and ignition circuits de-energized in not more than 4 seconds.
   f. A post purge period of 20 seconds following a shutdown.
   g. The control system shall recycle automatically under control of the operating control, and when power is restored following power failure. Manual reset shall be required following any safety lockout.
2. The control shall permit direct connection of safety limit switches, operating controls, starting interlocks, air flow switches, fuel temperature and pressure switches, running interlocks, modulator and lockout alarms.

Mechanical and Electrical

3. The control system shall be designed for 120 volt operation with one side grounded. All switching shall be accomplished in the hot circuit. The control and/or scanner shall have the following features:
   a. The program timing shall be accomplished by cam driven heavy duty switch assembly readily accessible for inspection. The timing periods must not vary more than 5% through an ambient temperature range of −20° to 125°F and through a supply voltage range of plus 10% or minus 15% of nominal line voltage.
   b. The contacts in the fuel valve circuit shall be of a weld-resistant tungsten alloy material.
   c. The flame safeguard control must incorporate a latch circuit which prevents the fuel valve from becoming re-energized following a safety shutdown, until a lockout has occurred and manual reset has initiated a complete restart.
   d. Test jack shall be provided for direct connection of a DC voltmeter to measure flame signal voltage.
   e. The control chassis shall be of plug-in design to facilitate replacement without disconnecting any external wiring.

Flame Detection

4. ULTRAVIOLET (UV)
   a. The pilot and main flames shall be monitored by an ultraviolet sensitive scanner which shall not be actuated by hot refractory.
   b. The scanner shall mount on and sight through a ½ inch or ⅜ inch standard pipe.
   c. The scanner shall be suitable for operation over a temperature range of −40°F to 212°F as measured on the mounting hub.